ACCESS SERVICE

6. Switched Access Service

6.1 General

Switched Access Service, which is available to customers for their use in furnishing their service to end users, provides a two-point electrical communications path between a customer's premises and end user's premises. It provides for the use of common terminating, switching and trunking facilities, dedicated trunking facilities, and common subscriber plant of the Telephone Company. Switched Access Service provides for the ability to originate calls from an end user's premises to a customer's premises, and to terminate calls from a customer's premises to an end user's premises in the Access Area where it is provided. Specific descriptions of each Switched Access Service are provided in 6.2. Switched Access Services may be connected to a customer's transmission equipment and facilities using a DS1 or DS3 Cross Connect arrangement where the customer is provided Expanded Interconnection Service as defined in Section 17.

Switched Access services, when used to provide Tandem Switch Signaling (TSS) may be connected to a customer's access tandem via Switched Transport Access services or to a customer's transmission equipment and facilities using a DS1 or DS3 Cross Connect arrangement where the customer is provided Expanded Interconnection Service as described in Section 17. TSS is available only with FGD and BSA-D Switched Access, 500 SAC Access and 900 SAC Access Services provided from equal access end offices. TSS is provided in multifrequency (MF) address signaling format from equal access end offices. TSS is also provided in SS7 Out of Band Signaling format at suitably equipped (Service Switching Point) end offices. TSS is not available from (D) Telephone Company access tandems.

The Telephone Company, to the extent that such services are or can be made available with reasonable effort, and after provision has been made for the Telephone Company's telephone exchange services, will provide to the customer upon reasonable notice service offered in this section of this tariff at rates and charges specified therein.

ACCESS SERVICE

6. Switched Access Service

6.1.1 Service Arrangements

Switched Access is provided in conjunction with either of two types of access services, bundled Feature Groups or unbundled Lineside, Trunkside and Dedicated Network Access Link (DNAL) Basic Serving Arrangements (BSAs). BSAs, described in 6.2.5, 6.2.6, and 6.2.8, are provided in two basic categories differentiated by their technical (D) characteristics and how they connect, line side or trunk side connection, to the Telephone Company's first point of switching. The trunk side BSA is further differentiated into two alternatives based upon how the end user accesses (C) the trunk side BSA, with or without an access code. Feature Group A (FGA) and Basic Serving Arrangement A (BSA-A) are defined as line side connections to the Telephone Company's network. Feature Group B (FGB), Feature Group D (FGD), Basic Serving Arrangement Alternative B (BSA-B), and Basic Serving Arrangement (D) Alternative D (BSA-D) are defined as trunk side connections to the Telephone Company's network. The use of a line side or trunk side switched access connection is dependent upon the switched access arrangement ordered by the customer.

Feature Groups and BSAs are arranged for either originating, terminating or two-way calling, based on the customer end office switching capacity ordered, while originating 500 Access Service, Toll Free Data Base Access Service and 900 Access Service is arranged for originating calling only. Originating calling permits the delivery of calls from Telephone Exchange Service locations to the customer's premises. Terminating calling permits the delivery of calls from the customer's premises to Telephone Exchange Service locations. Two-way calling permits the delivery of calls in both directions, but not simultaneously.

Switched Access will be provided as both Feature Groups and BSAs to Telephone Company end offices either directly routed or routed via an access tandem, except as set forth following:

- Feature Group and BSA trunk side equivalents (FGB and BSA-B, and FGD and BSA-D) may not be (D) provided for the same Carrier Identification Code (CIC) and/or Billing Account Number (BAN) at Telephone Company end offices which subtend the same tandem. When a Telephone Company end office subtends multiple tandems, Feature Group and BSA trunk side equivalents may not be provided for the same CIC and/or BAN at any Telephone Company end office which subtends either tandem.

- Feature Group and BSA line side equivalents (FGA and BSA-A) may not be mixed in the same multiline hunt group.

Switched Access ordering regulations are detailed in 5.1.

ACCESS SERVICE

6. **Switched Access Service** (Cont'd)

6.1 **General** (Cont'd)

6.1.1 **Service Arrangements** (Cont'd)

Switched access feature groups and BSAs may be provided in conjunction with voice grade Special Access services in order to complete communications to and from the customer's location. A complete description of the Switched Access Interface Arrangement is set forth in 6.3.2(T).

6.1.2 **Technical Specifications**

There are three specific transmission specifications (i.e., Types A, B and C) that have been identified for the provision of Switched Access Arrangements. The specifications provided are dependent on the Interface Group associated with the Local Transport Entrance Facility and the routing of the service, i.e., whether the service is routed directly to the end office or via a Telephone Company access tandem. The parameters for the transmission specifications and descriptions of the Interface Groups are set forth in 9.

6.1.3 **Optional Features**

There are various nonchargeable optional features available with the Switched Access Feature Group Arrangements. These additional optional features are provided as Local Transport, Common Switching or Transport Termination options. Nonchargeable optional features for each Switched Access Arrangement are identified in 6.2.1, 6.2.2, 6.2.3, 6.2.4, 6.2.10, 6.2.11, 6.2.12 and 6.2.13.

ACCESS SERVICE

6. **Switched Access Service** (Cont'd)

6.2 **Switched Access Service Arrangements**

Following are detailed descriptions of each of the available Feature Groups, 500 Access Service, Toll Free Data (T) Base Access Service and 900 Access Service. Each is described in terms of its specific physical characteristics and (T) calling patterns, the transmission specifications with which it is provided and the optional features available for use.

Optional features are described in 6.3. Additional regulations pertaining to the provision of these arrangements are set forth in 6.4.

ACCESS SERVICE

6. **Switched Access Service** (Cont'd)

6.2 **Switched Access Service Arrangements** (Cont'd)

6.2.1 **Feature Group A (FGA)#**

(A) Description

(1) FGA is provided via a line side connection at Telephone Company electronic and electromechanical end office switches with an associated seven digit telephone number for the customer's use in originating communications to or terminating communications from an Interexchange Carrier's Interstate Service or a customer provided interstate communications capability. At the option of the customer, FGA is provided on a single or multiple line group basis and is arranged for originating calling only, terminating calling only, or two-way calling.

(2) FGA provides a line side termination at the first point of switching. The line side termination will be provided with either ground start supervisory signaling or loop start supervisory signaling. The type of signaling is at the option of the customer.

(3) The Telephone Company shall select the first point of switching, within the selected FGA Access Area, at which the line side connection is to be provided unless the customer requests a different first point of switching and Telephone Company facilities and measurement capabilities, where necessary, are available to accommodate such a request.

(4) A seven digit local telephone number assigned by the Telephone Company is provided for access to FGA switching in the originating direction. The seven digit local telephone number will be associated with the selected end office switch and is of the form NXX-XXXX.

Effective February 13, 2026, this service is no longer available to new customers. Moves, changes, or modifications to this service will no longer be supported. Service modifications for customers with existing contracts are subject to the terms of their contracts. For wire centers specific service withdrawal information, please refer to Section 21 of this Tariff. (C)

ACCESS SERVICE

6. **Switched Access Service** (Cont'd)

6.2 **Switched Access Service Arrangements** (Cont'd)

6.2.1 **Feature Group A (FGA)#** (Cont'd)

(A) Description (Cont'd)

(4) (Cont'd)

If the customer requests a specific seven digit telephone number that is not currently assigned, and the Telephone Company can, with reasonable effort, comply with that request, the requested number will be assigned to the customer.

(5) FGA switching, when used in the terminating direction, is arranged with dial tone start-dial signaling. When used in the terminating direction FGA switching may, at the option of the customer, be arranged for dial pulse or dual tone multifrequency address signaling, subject to availability of equipment at the first point of switching. When FGA switching is provided in a hunt group or uniform call distribution arrangement, all FGA switching will be arranged for the same type of address signaling.

(6) No address signaling is provided by the Telephone Company when FGA Switching is used in the originating direction. Address signaling in such cases, if required by the customer, must be provided by the customer's end user using inband tone signaling techniques. Such inband tone address signals will not be regenerated by the Telephone Company and will be subject to the ordinary transmission capabilities of the Local Transport provided.

(7) FGA Switching, when used in the terminating direction, may be used to access the Telephone Company specified set of valid NXXs within the FGA Access Area.

For FGA, the Access Area is defined as the local exchange calling area of the end office switch from which the FGA service is provided as set forth in the Telephone Company's local or general exchange service tariff.

Effective February 13, 2026, this service is no longer available to new customers. Moves, changes, or modifications to this service will no longer be supported. Service modifications for customers with existing contracts are subject to the terms of their contracts. For wire centers specific service withdrawal information, please refer to Section 21 of this Tariff. (C)

ACCESS SERVICE

6. **Switched Access Service** (Cont'd)

6.2 **Switched Access Service Arrangements** (Cont'd)

6.2.1 **Feature Group A (FGA)#** (Cont'd)

(A) Description (Cont'd)

(7) (Cont'd)

At the customer's option, Access is also provided for terminating FGA calls, established on a 1+ basis, to NXXs outside the FGA Access Area but remaining within the LATA. Switched Access Service rate elements will apply to such traffic as set forth in 6.5.9 following.

Terminating access is also provided to local operator service (0- and 0+), Directory Assistance (411 where available and 555-1212) emergency reporting service (911 where available), exchange telephone repair (611 where available), time or weather announcement services of the Telephone Company, community information services of an information service provider, and other customers' services (by dialing the appropriate digits).

Charges for FGA terminating calls requiring operator assistance or calls to 611 or 911 will only apply where sufficient call details are available. Additional non-access charges will also be billed on a separate account for (1) an operator surcharge, as set forth in the local exchange tariffs, for local operator assistance (0- and 0+) calls, (2) calls to certain community information services, for which rates are applicable under Telephone Company exchange service tariffs, e.g., 976 (DIAL-IT) Network Services, and (3) calls from a FGA line to another customer's service in accordance with that customer's applicable service rates when the Telephone Company performs the billing function for that customer.

For calls to Directory Assistance additional non access charges may also be billed at the applicable rates under the Telephone Company local exchange tariffs.

(8) Feature Group A Switched Access Service is available with additional termination (i.e. extensions) of the service at different building(s) in the same or different local calling area. Application of rates for Feature Group A extension service is found in 6.5.8 following.

Effective February 13, 2026, this service is no longer available to new customers. Moves, changes, or modifications to this service will no longer be supported. Service modifications for customers with existing contracts are subject to the terms of their contracts. For wire centers specific service withdrawal information, please refer to Section 21 of this Tariff. (C)

ACCESS SERVICE

6. Switched Access Service (Cont'd)

6.2 Switched Access Service Arrangements (Cont'd)

6.2.1 Feature Group A (FGA)# (Cont'd)

(A) Description (Cont'd)

(9) When a FGA switching arrangement for an individual customer (a single line or entire hunt group) is discontinued at an end office, an intercept announcement is provided. This arrangement provides, for a limited period of time, an announcement that the service associated with the number dialed has been disconnected.

(10) Message Unit Credit

Calls from end users to the seven digit local telephone numbers associated with Feature Group A Switched Access Service are subject to Telephone Company local and/or general exchange service tariff charges (including message unit and toll charges as applicable). The monthly bills rendered to customers for their Feature Group A Switched Access Service will include a credit to reflect any message unit charges billed to their end users under the Telephone Company's local and/or general exchange service tariffs. The credit will apply for recorded originating usage for the FGA service provided. No credit will apply for any terminating FGA access minutes. The message unit credit for originating access minutes will be based on the generally applicable message unit charges of the Telephone Company. All applicable message unit credits will be developed on an exchange specific basis only.

Effective February 13, 2026, this service is no longer available to new customers. Moves, changes, or modifications to this service will no longer be supported. Service modifications for customers with existing contracts are subject to the terms of their contracts. For wire centers specific service withdrawal information, please refer to Section 21 of this Tariff. (C) | | (C)

6. **Switched Access Service** (Cont'd)

6.2 **Switched Access Service Arrangements** (Cont'd)

6.2.1 **Feature Group A (FGA)#** (Cont'd)

(B) Optional Features

(1) Common Switching Optional Features

(a) Hunt Group Arrangement
(b) Uniform Call Distribution Arrangement
(c) Nonhunting Number for Use with Hunt Group Arrangement or Uniform Call Distribution Arrangement
(d) Call Denial
(e) Service Code Denial
(f) Switched Access Interface

(2) Transport Termination Optional Features

(a) Two-way operation with dial pulse address signaling and loop start supervisory signaling
(b) Two-way operation with dial pulse address signaling and ground start supervisory signaling
(c) Two-way operation with dual tone multifrequency address signaling and loop start supervisory signaling
(d) Two-way operation with dual tone multifrequency address signaling and ground start supervisory signaling
(e) Terminating operation with dial pulse address signaling and loop start supervisory signaling
(f) Terminating operation with dial pulse address signaling and ground start supervisory signaling
(g) Terminating operation with dual tone multifrequency address signaling and loop start supervisory signaling
(h) Terminating operation with dual tone multifrequency address signaling and ground start supervisory signaling
(i) Originating operation with loop start supervisory signaling
(j) Originating operation with ground start supervisory signaling.

Effective February 13, 2026, this service is no longer available to new customers. Moves, changes, or modifications to this service will no longer be supported. Service modifications for customers with existing contracts are subject to the terms of their contracts. For wire centers specific service withdrawal information, please refer to Section 21 of this Tariff. (C)

ACCESS SERVICE

6. **Switched Access Service** (Cont'd)

6.2 **Switched Access Service Arrangements** (Cont'd)

6.2.1 **Feature Group A (FGA)#** (Cont'd)

(B) Optional Features (Cont'd)

(3) Local Transport Optional Features

(a) Supervisory Signaling
(b) Customer Specified Entry Switch Receive Level

(4) Local Features

Certain other features which may be available in connection with Feature Group A are provided under the Telephone Company's local and/or general exchange service tariffs.

These are:
(a) Speed Calling
(b) Remote Call Forwarding
(c) Bill Number Screening
(d) IntraLATA extensions

(C) Transmission Specifications

FGA is provided with either Type B or Type C Transmission Specifications. The specifications for the associated parameters are guaranteed to the first point of switching. Type C Transmission Specifications are provided with Interface Group 1 and Type B is provided with Interface Groups 2, 6, 8, 9 and 10. Type DB Data Transmission Parameters are provided with FGA to the first point of switching. FGA Interface Groups and Codes are described further in 9 following. FGA Transmission specifications are described further in 9 following.

Effective February 13, 2026, this service is no longer available to new customers. Moves, changes, or modifications to this service will no longer be supported. Service modifications for customers with existing contracts are subject to the terms of their contracts. For wire centers specific service withdrawal information, please refer to Section 21 of this Tariff. (C)

ACCESS SERVICE

6. **Switched Access Service** (Cont'd)

6.2 **Switched Access Service Arrangements** (Cont'd)

6.2.2 **Feature Group B (FGB)**

(A) Description

(1) FGB provides trunk side access to Telephone Company end office switches with an associated uniform access code for the customer's use in originating communications to and terminating communications from an Interexchange Carrier's Interstate Service or a customer - provided interstate communications capability. FGB is provided by the Telephone Company directly to appropriately equipped Telephone Company electronic end offices or via Telephone Company designated electronic access tandems which provides access to Telephone Company electronic and electromechanical end offices within that Telephone Company Access Tandem Network.

(2) FGB is provided as trunk side switching through the use of end office or Telephone Company access tandem switch trunk equipment. The switch trunk equipment is provided with wink start start-pulsing signals and answer and disconnect supervisory signaling.

(3) FGB switching is provided with multifrequency address signaling in both the originating and terminating directions. Except for FGB switching provided with automatic number identification (ANI) or rotary dial station signaling arrangements as set forth in 6.3, any other address signaling in the originating direction, if required by the customer, must be provided by the customer's end user using inband tone signaling techniques. Such inband tone address signals will not be regenerated by the Telephone Company and will be subject to the ordinary transmission capabilities of the Local Transport provided.

(4) The access code for FGB switching is a uniform access code in the form of 950-XXXX or 1+950-XXXX for carriers. One uniform access code will be assigned to the customer for the customer's domestic communications and another will be assigned to the customer for its international communications, if required. These uniform access codes will be the assigned access numbers of all FGB switched access service provided to the customer by the Telephone Company.

ACCESS SERVICE

6. **Switched Access Service** (Cont'd)

6.2 **Switched Access Service Arrangements** (Cont'd)

6.2.2 **Feature Group B (FGB)** (Cont'd)

(A) Description (Cont'd)

(5) FGB switching, when used in the terminating direction, may be used to access valid NXXs in the FGB Access Area. When directly routed to an end office, the Access Area for FGB includes only those valid NXX codes served by that end office. When routed through a Telephone Company access tandem the Access Area for FGB service includes only those valid NXX codes served by end offices subtending that Telephone Company access tandem.

Access is also available to time or weather announcement services of the Telephone Company, community information services of an information service provider and other customers' services (by dialing the appropriate digits).

The customer will also be billed additional non-access charges for calls to certain community information services for which rates are applicable under Telephone Company exchange service tariffs, e.g., 976 (DIAL-IT) Network Service. Additionally, non-access charges will also be billed for calls from a FGB trunk to another customer's service in accordance with that customer's applicable service rates when the Telephone Company performs the billing function for that customer.

Calls in the terminating direction will not be completed to 950-XXXX or 1 + 950-XXXX access codes, local operator assistance (0- and 0+), Directory Assistance (411 and 555-1212), service codes 611 and 911 or 101XXXX access codes. FGB may not be switched, in the terminating direction, to Switched Access Service Feature Groups B and D. (D)

ACCESS SERVICE

6. **Switched Access Service** (Cont'd)

6.2 **Switched Access Service Arrangements** (Cont'd)

6.2.2 **Feature Group B (FGB)** (Cont'd)

(A) Description (Cont'd)

(6) The Telephone Company will establish a trunk group or groups for the customer at end offices or Telephone Company access tandems where FGB is provided. When required by technical limitations, a separate trunk group will be established for each type of FGB arrangement provided. Different types of FGB or other switching arrangements may be combined in a single trunk group at the option of the Telephone Company.

(7) When all FGB is discontinued at an end office and/or in a Access Area, an intercept announcement is provided. This arrangement provides, for a limited period of time, an announcement that the service associated with the number dialed has been disconnected.

ACCESS SERVICE

6. **Switched Access Service** (Cont'd)

6.2 **Switched Access Service Arrangements** (Cont'd)

6.2.2 **Feature Group B (FGB)** (Cont'd) (x)

(B) Optional Features

(1) Common Switching Optional Features

(a) Automatic Number Identification (ANI)
(b) Up to Seven Digit Outpulsing of Access Digits to Customer
(c) Switched Access Interface

(2) Transport Termination Optional Features

(a) Rotary Dial Station Signaling

(3) Local Transport Optional Features

(a) Customer Specification of Local Transport Termination
(b) Supervisory Signaling
(c) Customer Specified Entry Switch Receive Level

(4) Local Features
Another feature, Bill Number Screening, which may be available in connection with FGB, is provided under the Telephone Company's local and/or general exchange service tariffs.

(C) Transmission Specifications

FGB is provided with either Type B or Type C Transmission Specifications. The specifications for the associated parameters are guaranteed to the end office when routed directly or to the first point of switching when routed via a Telephone Company access tandem. Type C Transmission Specifications are provided with Interface Group 1 and (x) Type B is provided with Interface Groups 2, 6, 8, 9 and 10. Type DB Data Transmission Parameters are provided (C) with FGB to the first point of switching. (x)

(x) Reinstating effective material inadvertently omitted under Transmittal No. 1101, which became effective August 11, 2010.

Material previously appearing on 1st Revised Page 6-14 currently appears on 2nd Revised Page 6-19.

ACCESS SERVICE

6. **Switched Access Service** (Cont'd)

6.2 **Switched Access Service Arrangements** (Cont'd)

6.2.3 **Reserved for Future Use** (C)

(D)

(D)

ACCESS SERVICE

6. **Switched Access Service** (Cont'd)

6.2 **Switched Access Service Arrangements** (Cont'd)

(D)

(D)

ACCESS SERVICE

6. **Switched Access Service** (Cont'd)

6.2 **Switched Access Service Arrangements** (Cont'd)

(D)
|
|
|
|
|
|
|
|
|
(D)

ACCESS SERVICE

6. **Switched Access Service** (Cont'd)

6.2 **Switched Access Service Arrangements** (Cont'd)

(D)

(D)

ACCESS SERVICE

6. Switched Access Service (Cont'd)

6.2 Switched Access Service Arrangements (Cont'd)

(D)

(D)

ACCESS SERVICE

6. **Switched Access Service** (Cont'd)

6.2 **Switched Access Service Arrangements** (Cont'd)

6.2.4 **Feature Group D (FGD)**

(A) Description

(1) FGD is provided at Telephone Company designated end offices whether routed directly or via Telephone Company designated access tandems. (D)
(D)
(D)
(D)

(2) FGD is provided as trunk side switching through the use of end office or Telephone Company access tandem switch trunk equipment. The switch trunk equipment is provided with wink start start-pulsing signals and answer and disconnect supervisory signaling except for FGD provided with SS7 Out of Band Signaling.

(3) FGD is provided with multifrequency address signaling or SS7 Out of Band Signaling. FGD with SS7 Out of Band Signaling is provided at suitably equipped Telephone Company end offices or Telephone Company access tandems. Up to 12 digits of the called party number dialed by the customer's end user using dual tone multifrequency or dial pulse address signals will be provided by Telephone Company equipment to the customer's premises where the Switched Access Service terminates. Such address signals will be subject to the ordinary transmission capabilities of the Local Transport provided.

(4) FGD, when used in the terminating direction, may be used to access valid NXXs in the FGD Access Area. When directly routed to an end office the FGD Access Area includes only those valid NXX codes served by that office. When routed through a Telephone Company access tandem, the FGD Access Area includes only those valid NXX codes served by end offices in the Telephone Company access tandem network. (D)

Access is also available to time or weather announcement services of the Telephone Company, community information service of an information service provider, and other customers' services (by dialing the appropriate codes) when such services can be reached using valid NXX codes.

ACCESS SERVICE

6. **Switched Access Service** (Cont'd)

6.2 **Switched Access Service Arrangements** (Cont'd)

6.2.4 **Feature Group D (FGD)** (Cont'd)

(A) Description (Cont'd)

(5) The Telephone Company will establish a trunk group or groups for the customer at the First Point(s) of Switching where FGD is provided. When required by technical limitations, a separate trunk group will be established for each type of FGD arrangement provided. Different types of FGD or other switching arrangements may be combined in a single trunk group at the option of the Telephone Company.

(6) No access code is required for calls to a customer over FGD Switched Access Service if the end user's telephone exchange service is arranged for presubscription to that customer, as set forth in 8.5. Where no access code is required, the number dialed by the customer's end user shall be a seven or ten digit number for calls in the North American Numbering Plan (NANP). For international calls outside the NANP, a seven to twelve digit number may be dialed. The form of the number dialed by the customer's end user is NXX-XXXX, 0 or 1 + NXX-XXXX, NPA + NXX-XXXX, 0 or 1 + NPA + NXX-XXXX, and, when the end office is equipped for International Direct Distance Dialing (IDDD), 01 + CC + NN or 011 + CC + NN.

The access code for FGD is a uniform access code of the form 101XXXX. (D)
(D)
(D)
(D)

FGD also provides for dialing the digit 0 for access to the customer's operator, 911 for access to the Telephone Company's emergency reporting service, or the end-of-dialing digit for cut-through access to the customer's premises. FGD provides for the dialing of digits 00 for access on a non-DDD basis to the customer's operator when the end user's service is designated to the customer as set forth in 8.5. (C)

In addition to the standard 101XXXX access code, the customer has the option to use 950-XXXX as an access code for FGD Switched Access Service. When the customer orders FGD Switched Access Service with 950-XXXX Access as described in 6.3.2(AB), FGD switched access calls may also be originated by using the customer's 950-XXXX access code(s). All such calls will be rated as FGD switched access calls.

ACCESS SERVICE

6. **Switched Access Service** (Cont'd)

6.2 **Switched Access Service Arrangements** (Cont'd)

6.2.4 **Feature Group D (FGD)** (Cont'd)

(A) Description (Cont'd)

(7) (Reserved for future Use) (C)
(D)
(D)
(D)

ACCESS SERVICE

6. **Switched Access Service** (Cont'd)

6.2 **Switched Access Service Arrangements** (Cont'd)

6.2.4 **Feature Group D (FGD)** (Cont'd) (M)(x)

(B) Optional Features

(1) Common Switching Optional Features

(a) Automatic Number Identification (ANI)
(b) Service Class Routing
(c) Alternate Traffic Routing
(d) Call Gapping Arrangement
(e) Trunk Access Limitation
(f) International Carrier Option
(g) Non-Overlap Outpulsing
(h) Cut-Through
(i) Switched Access Interface
(j) Switched Data Service
(k) SS7 Out of Band Signaling
(l) Tandem Switch Signaling
(m) FGD With 950 Access

(2) Transport Termination Optional Features

(a) Operator Trunk, Full Feature Arrangement

(3) Local Transport Optional Features

(a) Supervisory Signaling as set forth in 6.3.1.

(C) Transmission Specifications

FGD is provided with either Type A, Type B or Type C Transmission Specifications as follows:

- When routed directly to the end office either Type B or C is provided.
- When routed to a Telephone Company access tandem only Type A is provided.
- Type A is provided on the transmission path from the Telephone Company access tandem to the end office.

Type C Transmission specifications are provided with Interface Group 1. Type A and Type B Transmission Specifications are provided with Interface Groups 2, 6, 8, 9 and 10. (M)(x)

(x) Material currently appearing on this page previously appeared on 1st Revised Page 6-19.

Material previously appearing on this page currently appears on 2nd Revised Page 6-30.

ACCESS SERVICE

6. **Switched Access Service** (Cont'd)

6.2 **Switched Access Service Arrangements** (Cont'd)

6.2.4 **Feature Group D (FGD)** (Cont'd)

(C) Transmission Specifications (Cont'd)

Type DA Data Transmission Parameters are provided for the transmission path between the customer's premises and the Telephone Company access tandem and between the Telephone Company access tandem and the end office. Type DB Data Transmission Parameters are provided with FGD for the transmission path between the customer's premises and the end office when directly routed to the end office.

ACCESS SERVICE

6. **Switched Access Service** (Cont'd)

6.2 **Switched Access Service Arrangements** (Cont'd)

6.2.5 **Basic Serving Arrangement A (BSA-A)#** (T)

(A) Description

(1) BSA-A is provided via a line side connection at Telephone Company electronic and electromechanical end office switches with an associated seven digit telephone number for the customer's use in originating communications to or terminating communications from an Interexchange Carrier's Interstate Service or a customer provided interstate communications capability. At the option of the customer, BSA-A is provided on a single or multiple line group basis and is arranged for originating calling only, terminating calling only, or two-way calling.

(2) BSA-A provides a line side termination at the first point of switching. The line side termination will be provided with either ground start supervisory signaling or loop start supervisory signaling. The type of signaling is at the option of the customer. BSA-A may also be provided with certain Basic Service Elements (BSEs) as shown in 6.2.14.

(3) The Telephone Company shall select the first point of switching, within the selected BSA-A Access Area, at which the line side connection is to be provided unless the customer requests a different first point of switching and Telephone Company facilities and measurement capabilities, where necessary, are available to accommodate such a request.

(4) A seven digit local telephone number assigned by the Telephone Company is provided for access to BSA-A switching in the originating direction. The seven digit local telephone number will be associated with the selected end office switch and is of the form NXX-XXXX.

Service availability limited. Refer to # note on Page 21-14. (N)

ACCESS SERVICE

6. **Switched Access Service** (Cont'd)

6.2 **Switched Access Service Arrangements** (Cont'd)

6.2.5 **Basic Serving Arrangement A (BSA-A)#** (Cont'd) (T)

(A) Description (Cont'd)

(4) (Cont'd)

If the customer requests a specific seven digit telephone number that is not currently assigned, and the Telephone Company can, with reasonable effort, comply with that request, the requested number will be assigned to the customer.

(5) BSA-A, when used in the terminating direction, is arranged with dial tone start-dial signaling. When used in the terminating direction BSA-A may, at the option of the customer, be arranged for dial pulse or dual tone multifrequency address signaling, subject to availability of equipment at the first point of switching. When BSA-A is provided in a Hunt Group or Uniform Call Distribution Arrangement as discussed in 6.2.14, all BSA-A will be arranged for the same type of address signaling.

(6) No address signaling is provided by the Telephone Company when BSA-A is used in the originating direction. Address signaling in such cases, if required by the customer, must be provided by the customer's end user using inband tone signaling techniques. Such inband tone address signals will not be regenerated by the Telephone Company and will be subject to the ordinary transmission capabilities of the Local Transport provided.

(7) BSA-A when used in the terminating direction, may be used to access the Telephone Company specified set of valid NXXs within the BSA-A Access Area.

For BSA-A, the Access Area is defined as the local exchange calling area of the end office switch from which the BSA-A service is provided as set forth in the Telephone Company's local or general exchange service tariff.

Service availability limited. Refer to # note on Page 21-14. (N)

ACCESS SERVICE

6. **Switched Access Service** (Cont'd)

6.2 **Switched Access Service Arrangements** (Cont'd)

6.2.5 **Basic Serving Arrangement A (BSA-A)#** (Cont'd) (T)

(A) Description (Cont'd)

(7) (Cont'd)

At the customer's option, Access is also provided for terminating BSA-A calls, established on a 1+ basis, to NXXs outside the BSA-A Access Area but remaining within the LATA. Switched Access Service rate elements will apply to such traffic as set forth in 6.5.9 following.

Terminating access is also provided to local operator service (0- and 0+), Directory Assistance (411 where available and 555-1212) emergency reporting service (911 where available), exchange telephone repair (611 where available), time or weather announcement services of the Telephone Company, community information services of an information service provider, and other customers' services (by dialing the appropriate digits).

Charges for BSA-A terminating calls requiring operator assistance or calls to 611 or 911 will only apply where sufficient call details are available. Additional non-access charges will also be billed on a separate account for (1) an operator surcharge, as set forth in the local exchange tariffs, for local operator assistance (0- and 0+) calls, (2) calls to certain community information services, for which rates are applicable under Telephone Company exchange service tariffs, e.g., 976 (DIAL-IT) Network Services, and (3) calls from a FGA line to another customer's service in accordance with that customer's applicable service rates when the Telephone Company performs the billing function for that customer.

For calls to Directory Assistance additional non access charges may also be billed at the applicable rates under the Telephone Company local exchange tariffs.

(8) BSA-A Switched Access Service is available with additional termination (i.e. extensions) of the service at different building(s) in the same or different local calling area. Application of rates for BSA-A extension service is found in 6.5.8 following.

Service availability limited. Refer to # note on Page 21-14. (N)

ACCESS SERVICE

6. Switched Access Service (Cont'd)

6.2 Switched Access Service Arrangements (Cont'd)

6.2.5 Basic Serving Arrangement A (BSA-A)# (Cont'd) (T)

(A) Description (Cont'd)

(9) When a BSA-A switching arrangement for an individual customer (a single line or entire hunt group) is discontinued at an end office, an intercept announcement is provided. This arrangement provides, for a limited period of time, an announcement that the service associated with the number dialed has been disconnected.

(10) Message Unit Credit

Calls from end users to the seven digit local telephone numbers associated with BSA-A Switched Access Service are subject to Telephone Company local and/or general exchange service tariff charges (including message unit and toll charges as applicable). The monthly bills rendered to customers for their BSA-A Switched Access Service will include a credit to reflect any message unit charges billed to their end users under the Telephone Company's local and/or general exchange service tariffs. The credit will apply for recorded originating usage for the BSA-A service provided. No credit will apply for any terminating BSA-A access minutes. The message unit credit for originating access minutes will be based on the generally applicable message unit charges of the Telephone Company. All applicable message unit credits will be developed on an exchange specific basis only.

Service availability limited. Refer to # note on Page 21-14. (N)

ACCESS SERVICE

6. **Switched Access Service** (Cont'd)

6.2 **Switched Access Service Arrangements** (Cont'd)

6.2.5 **Basic Serving Arrangement A (BSA-A)#** (Cont'd) (T)

(B) Optional Features

(1) Common Switching Optional Features

(a) Call Denial
(b) Service Code Denial
(c) Switched Access Interface

(2) Transport Termination Optional Features

(a) Two-way operation with dial pulse address signaling and loop start supervisory signaling
(b) Two-way operation with dial pulse address signaling and ground start supervisory signaling
(c) Two-way operation with dual tone multifrequency address signaling and loop start supervisory signaling
(d) Two-way operation with dual tone multifrequency address signaling and ground start supervisory signaling
(e) Terminating operation with dial pulse address signaling and loop start supervisory signaling
(f) Terminating operation with dial pulse address signaling and ground start supervisory signaling
(g) Terminating operation with dual tone multifrequency address signaling and loop start supervisory signaling
(h) Terminating operation with dual tone multifrequency address signaling and ground start supervisory signaling
(i) Originating operation with loop start supervisory signaling
(j) Originating operation with ground start supervisory signaling.

Service availability limited. Refer to # note on Page 21-14. (N)

ACCESS SERVICE

6. **Switched Access Service** (Cont'd)

6.2 **Switched Access Service Arrangements** (Cont'd)

6.2.5 **Basic Serving Arrangement A (BSA-A)#** (Cont'd) (T)

(B) Optional Features (Cont'd)

(3) Local Transport Optional Features

(a) Supervisory Signaling
(b) Customer Specified Entry Switch Receive Level

(4) Local Features

Certain other features which may be available in connection with BSA-A are provided under the Telephone Company's local and/or general exchange service tariffs.

These are:
(a) Speed Calling
(b) Remote Call Forwarding
(c) Bill Number Screening
(d) IntraLATA extensions

(C) Transmission Specifications

BSA-A is provided with either Type B or Type C Transmission Specifications. The specifications for the associated parameters are guaranteed to the first point of switching. Type C Transmission Specifications are provided with Interface Group 1 and Type B is provided with Interface Groups 2, 6, 8, 9 and 10. Type DB Data Transmission Parameters are provided with BSA-A to the first point of switching. BSA-A Interface Groups and Codes are described further in 9 following. BSA-A Transmission specifications are described further in 9 following.

Service availability limited. Refer to # note on Page 21-14. (N)

ACCESS SERVICE

6. **Switched Access Service** (Cont'd)

6.2 **Switched Access Service Arrangements** (Cont'd)

6.2.6 **Basic Serving Arrangement B (BSA-B)** (T)

(A) Description

(1) BSA-B provides trunk side access to Telephone Company end office switches with an associated uniform access code for the customer's use in originating communications to and terminating communications from an Interexchange Carrier's Interstate Service or a customer - provided interstate communications capability. BSA-B is provided by the Telephone Company directly to appropriately equipped Telephone Company electronic end offices or via Telephone Company designated electronic access tandems which provides access to Telephone Company electronic and electromechanical end offices within that Telephone Company Access Tandem Network.

(2) BSA-B is provided as trunk side switching through the use of end office or Telephone Company access tandem switch trunk equipment. The switch trunk equipment is provided with wink start start-pulsing signals and answer and disconnect supervisory signaling. BSA-B may also be provided with certain Basic Service Elements (BSEs) as shown in 6.2.14.

(3) BSA-B switching is provided with multifrequency address signaling in both the originating and terminating directions. If the customer orders and Automatic Number Identification (ANI) Arrangement, as shown in 6.2.14, or rotary dial station signaling arrangements as set forth in 6.3, any other address signaling in the originating direction, if required by the customer, must be provided by the customer's end user using inband tone signaling techniques. Such inband tone address signals will not be regenerated by the Telephone Company and will be subject to the ordinary transmission capabilities of the Local Transport provided.

(4) The access code for BSA-B switching is a uniform access code in the form of 950-XXXX or 1+950-XXXX for carriers. One uniform access code will be assigned to the customer for the customer's domestic communications and another will be assigned to the customer for its international communications, if required. These uniform access codes will be the assigned access numbers of all BSA-B switched access service provided to the customer by the Telephone Company.

ACCESS SERVICE

6. **Switched Access Service** (Cont'd)

6.2 **Switched Access Service Arrangements** (Cont'd)

6.2.6 **Basic Serving Arrangement B (BSA-B)** (Cont'd)

(A) Description (Cont'd)

(5) BSA-B switching, when used in the terminating direction, may be used to access valid NXXs in the BSA-B Access Area. When directly routed to an end office, the Access Area for BSA-B includes only those valid NXX codes served by that end office. When routed through a Telephone Company access tandem the Access Area for BSA-B service includes only those valid NXX codes served by end offices subtending that Telephone Company access tandem.

Access is also available to time or weather announcement services of the Telephone Company, community information services of an information service provider and other customers' services (by dialing the appropriate digits).

The customer will also be billed additional non-access charges for calls to certain community information services for which rates are applicable under Telephone Company exchange service tariffs, e.g., 976 (DIAL-IT) Network Service. Additionally, non-access charges will also be billed for calls from a BSA-B trunk to another customer's service in accordance with that customer's applicable service rates when the Telephone Company performs the billing function for that customer.

Calls in the terminating direction will not be completed to 950-XXXX or 1 + 950-XXXX access codes, local operator assistance (0- and 0+), Directory Assistance (411 and 555-1212), service codes 611 and 911 or 101XXXX access codes. BSA-B may not be switched, in the terminating direction, to Switched Access Basic Serving Arrangements BSA-B and BSA-D. (D)

ACCESS SERVICE

6. **Switched Access Service** (Cont'd)

6.2 **Switched Access Service Arrangements** (Cont'd)

6.2.6 **Basic Serving Arrangement B (BSA-B)** (Cont'd)

(A) Description (Cont'd)

(6) The Telephone Company will establish a trunk group or groups for the customer at end offices or Telephone Company access tandems where BSA-B is provided. When required by technical limitations, a separate trunk group will be established for each type of BSA-B arrangement provided. Different types of BSA-B or other switching arrangements may be combined in a single trunk group at the option of the Telephone Company.

(7) When all BSA-B is discontinued at an end office and/or in a Access Area, an intercept announcement is provided. This arrangement provides, for a limited period of time, an announcement that the service associated with the number dialed has been disconnected.

ACCESS SERVICE

6. **Switched Access Service** (Cont'd)

6.2 **Switched Access Service Arrangements** (Cont'd)

6.2.6 **Basic Serving Arrangement B (BSA-B)** (Cont'd) (M)(x)

(B) Optional Features

(1) Common Switching Optional Features

(a) Up to Seven Digit Outpulsing of Access Digits to Customer
(b) Switched Access Interface

(2) Transport Termination Optional Features

(a) Rotary Dial Station Signaling

(3) Local Transport Optional Features

(a) Customer Specification of Local Transport Termination
(b) Supervisory Signaling
(c) Customer Specified Entry Switch Receive Level

(4) Local Features
Another feature, Bill Number Screening, which may be available in connection with BSA-B, is provided under the Telephone Company's local and/or general exchange service tariffs.

(C) Transmission Specifications

BSA-B is provided with either Type B or Type C Transmission Specifications. The specifications for the associated parameters are guaranteed to the end office when routed directly or to the first point of switching when routed via a Telephone Company access tandem. Type C Transmission Specifications are provided with Interface Group 1 and Type B is provided with Interface Groups 2, 6, 8, 9 and 10. Type DB Data Transmission Parameters are provided with FGB to the first point of switching. (M)(x)

(x) Material currently appearing on this page previously appeared on 1st Revised Page 6-30.

Material previously appearing on this page currently appears on 2nd Revised Page 6-39.

ACCESS SERVICE

6. **Switched Access Service** (Cont'd)

6.2 **Switched Access Service Arrangements** (Cont'd)

6.2.7 **Reserved for Future Use** (C)

(D)

(D)

ACCESS SERVICE

6. **Switched Access Service** (Cont'd)

6.2 **Switched Access Service Arrangements** (Cont'd)

(D)

(D)

ACCESS SERVICE

6. **Switched Access Service** (Cont'd)

6.2 **Switched Access Service Arrangements** (Cont'd)

(D)
|
|
|
|
|
|
|
|
|
(D)

ACCESS SERVICE

6. **Switched Access Service** (Cont'd)

6.2 **Switched Access Service Arrangements** (Cont'd)

(D)

(D)

ACCESS SERVICE

6. Switched Access Service (Cont'd)

6.2 Switched Access Service Arrangements (Cont'd)

(D)

(D)

ACCESS SERVICE

6. **Switched Access Service** (Cont'd)

6.2 **Switched Access Service Arrangements** (Cont'd)

6.2.8 **Basic Serving Arrangement D (BSA-D)**

(A) Description

(1) BSA-D is provided at Telephone Company designated end offices whether routed directly or via Telephone Company designated access tandems. (D)
(D)
(D)
(D)

(2) BSA-D is provided as trunk side switching through the use of end office or Telephone Company access tandem switch trunk equipment. The switch trunk equipment is provided with wink start start-pulsing signals and answer and disconnect supervisory signaling except for BSA-D provided with SS7 Out of Band Signaling. BSA-D may also be provided with certain Basic Service Elements (BSEs) as shown in 6.2.14.

(3) BSA-D is provided with multifrequency address signaling or SS7 Out of Band Signaling. BSA-D with SS7 Out of Band Signaling is provided at suitably equipped Telephone Company end offices or Telephone Company access tandems. Up to 12 digits of the called party number dialed by the customer's end user using dual tone multifrequency or dial pulse address signals will be provided by Telephone Company equipment to the customer's premises where the Switched Access Service terminates. Such address signals will be subject to the ordinary transmission capabilities of the Local Transport provided.

(4) BSA-D, when used in the terminating direction, may be used to access valid NXXs in the BSA-D Access Area. When directly routed to an end office the BSA-D Access Area includes only those valid NXX codes served by that office. When routed through a Telephone Company access tandem, the BSA-D Access Area includes only those valid NXX codes served by end offices in the Telephone Company access tandem network. (D)

Access is also available to time or weather announcement services of the Telephone Company, community information service of an information service provider, and other customers' services (by dialing the appropriate codes) when such services can be reached using valid NXX codes.

ACCESS SERVICE

6. **Switched Access Service** (Cont'd)

6.2 **Switched Access Service Arrangements** (Cont'd)

6.2.8 **Basic Serving Arrangement D (BSA-D)** (Cont'd)

(A) Description (Cont'd)

(5) The Telephone Company will establish a trunk group or groups for the customer at the First Point(s) of Switching where BSA-D is provided. When required by technical limitations, a separate trunk group will be established for each type of BSA-D arrangement provided. Different types of BSA-D or other switching arrangements may be combined in a single trunk group at the option of the Telephone Company.

(6) No access code is required for calls to a customer over BSA-D Switched Access Service if the end user's telephone exchange service is arranged for presubscription to that customer, as set forth in 8.5. Where no access code is required, the number dialed by the customer's end user shall be a seven or ten digit number for calls in the North American Numbering Plan (NANP). For international calls outside the NANP, a seven to twelve digit number may be dialed. The form of the number dialed by the customer's end user is NXX-XXXX, 0 or 1 + NXX-XXXX, NPA + NXX-XXXX, 0 or 1 + NPA + NXX-XXXX, and, when the end office is equipped for International Direct Distance Dialing (IDDD), 01 + CC + NN or 011 + CC + NN.

The access code for BSA-D is a uniform access code of the form 101XXXX. (D)
(D)
(D)
(D)
(D)

BSA-D also provides for dialing the digit 0 for access to the customer's operator, 911 for access to the Telephone Company's emergency reporting service, or the end-of-dialing digit for cut-through access to the customer's premises. BSA-D provides for the dialing of digits 00 for access on a non-DDD basis to the customer's operator when the end user's service is designated to the customer as set forth in 8.5. (C)

In addition to the standard 101XXXX access code, the customer has the option to use 950-XXXX as an access code for BSA-D Switched Access Service. When the customer orders BSA-D Service with 950-XXXX Access as described in 6.3.2(AB), BSA-D switched access calls may also be originated by using the customer's 950-XXXX access code(s). All such calls will be rated as BSA-D switched access calls.

ACCESS SERVICE

6. **Switched Access Service** (Cont'd)

6.2 **Switched Access Service Arrangements** (Cont'd)

6.2.8 **Basic Serving Arrangement D (BSA-D)** (Cont'd)

(A) Description (Cont'd)

(7) (Reserved for Future Use) (C)
(D)
(D)
(D)

ACCESS SERVICE

6. **Switched Access Service** (Cont'd)

6.2 **Switched Access Service Arrangements** (Cont'd)

6.2.8 **Basic Serving Arrangement D (BSA-D)** (Cont'd) (M)(x)

(B) Optional Features

(1) Common Switching Optional Features

(a) Service Class Routing
(b) Call Gapping Arrangement
(c) Trunk Access Limitation
(d) International Carrier Option
(e) Non-Overlap Outpulsing
(f) Cut-Through
(g) Switched Access Interface
(h) Switched Data Service
(i) SS7 Out of Band Signaling
(j) Tandem Switch Signaling
(k) BSA-D With 950 Access

(2) Transport Termination Optional Features

(a) Operator Trunk, Full Feature Arrangement

(3) Local Transport Optional Features

(a) Supervisory Signaling [as set forth in 6.3.1.

(C) Transmission Specifications

BSA-D is provided with either Type A, Type B or Type C Transmission Specifications as follows:

- When routed directly to the end office either Type B or C is provided.
- When routed to a Telephone Company access tandem only Type A is provided.
- Type A is provided on the transmission path from the Telephone Company access tandem to the end office.

Type C Transmission specifications are provided with Interface Group 1. Type A and Type B Transmission Specifications are provided with Interface Groups 2, 6, 8, 9 and 10. (M)(x)

(x) Material currently appearing on this page previously appeared on 1st Revised Page 6-39.

Material previously appearing on this page currently appears on 3rd Revised Page 6-49.

ACCESS SERVICE

6. **Switched Access Service** (Cont'd)

6.2 **Switched Access Service Arrangements** (Cont'd)

6.2.8 **Basic Serving Arrangement D (BSA-D)** (Cont'd)

(C) Transmission Specifications (Cont'd)

Type DA Data Transmission Parameters are provided for the transmission path between the customer's premises and the Telephone Company access tandem and between the Telephone Company access tandem and the end office. Type DB Data Transmission Parameters are provided with BSA-D for the transmission path between the customer's premises and the end office when directly routed to the end office.

ACCESS SERVICE

6. **Switched Access Service** (Cont'd)

6.2 **Switched Access Service Arrangements** (Cont'd)

6.2.9 **Dedicated Network Access Link (DNAL)**

The DNAL provides a connection between the customer designated location and the Telephone Company End Office that provides the BSA-A dial tone for connection to equipment that is not part of the end office switch but that is used to provide the Simplified Message Desk Interface (SMDI) BSE. The DNAL is only available for use in conjunction with the SMDI BSE.

DNAL service is either a two-wire or four-wire channel which is capable of transmitting signals within the frequency bandwidth of approximately 300 to 3000 HZ.

There are two rate elements which apply to DNALs. The entrance facility, which provides the transmission path and interface between the Telephone Company's serving wire center and the customer provided facilities at the point of termination at the CDL. If the serving wire center is not the BSA-A dial tone office, then Direct-Trunked Transport will also apply for the mileage between the serving wire center and the BSA-A dial tone office.

The rates and charges for two-wire and four-wire voiceband Entrance Facilities and Direct-Trunked Transport Facility-Voiceband apply for the DNAL Entrance Facility and DNAL Direct-Trunked Transport, respectively.

ACCESS SERVICE

6. **Switched Access Service** (Cont'd)

6.2 **Switched Access Service Arrangements** (Cont'd)

6.2.10 **Toll Free* Data Base Access Service**

(A) Description

(1) Toll Free Data Base Access Service provides for the forwarding of end user dialed Toll Free-NXX-XXXX calls to a customer via a Telephone Company designated switch capable of performing a customer identification function. The Toll Free Data Base Access Service customer identification function utilizes Toll Free Data Base Query Service, as described in 6.2.10(D), to screen all ten digits of all Toll Free-NXX-XXXX type calls generated by end users to determine the customer to which Toll Free call is routed by the Telephone Company.

The Toll Free Data Base Access Service customer identification function will be available at suitably equipped end offices or Telephone Company access tandems. Once customer identification has been established, the call will be routed to the customer. Toll Free Data Base Access Service may be provided via Toll Free Data Base Access Service switched trunk groups or in conjunction with a customer's FGD Switched Access Service. Toll Free Data Base Access Service may also be provided in conjunction with BSA-D as shown in 6.2.7 and 6.2.8.

(2) Toll Free Data Base Access Service is an originating trunk side switched service that is available to the customer via Toll Free Data Base Access Service trunk(s) at Telephone Company designated switches capable of performing the Toll Free Data Base Access Service customer identification function. If the customer's Toll Free Data Base Access traffic originates from an end office switch not equipped to perform the Toll Free Data Base Access Service customer identification function, the call will be routed to the nearest office at which the function is available. Once customer identification has been established, the call will be routed to the customer.

Unless prohibited by technical limitations, the customer's Toll Free Data Base Access Service traffic may, at the option of the customer, be combined in the same trunk group arrangement with the customer's FGD or BSA-D Access Service traffic. When required by technical limitations a separate trunk group must be established for Toll Free Data Base Access Service.

* "Toll Free" is considered to mean any access service which utilizes any of the following NPAs: 800, 888, 877, 866, 855, 844, 833, 822, or other NPAs as they become available to the industry. (T)

ACCESS SERVICE

6. **Switched Access Service** (Cont'd)

6.2 **Switched Access Service Arrangements** (Cont'd)

6.2.10 **Toll Free Data Base Access Service** (Cont'd)

(A) Description (Cont'd)

(3) Toll Free Data Base Access Service is provided as trunk side switching through the use of end offices or Telephone Company access tandems. Toll Free Data Base Access Service originating from equal access end offices with the Toll Free Data Base Access Service customer identification function will be provided using Feature Group D signaling as set forth in 6.2.4 (A)(2) and (3) or BSA-D signaling as set forth in 6.2.8(A)(2)and (3). When Feature Group D signaling is provided, ANI will be provided in the same manner in which ANI is provided for Feature Group D as set forth in 6.3.2 (F). When BSA-D signaling is provided, at the option of the customer, ANI may be provided as set forth in 6.2.14.

(D)
|
|
|
(D)

(4) The Federal Communications Commission (FCC) has concluded that warehousing, which the FCC defines as Responsible Organizations, either directly or indirectly through an affiliate reserving toll free numbers form the SMS database without having an identified toll free subscriber from whom those numbers are being reserved, is an unreasonable practice under Section 201(b) of the Communications Act and is inconsistent with the Commission's obligation under Section 251(e) of the Communications Act to ensure that numbers are made available on an equitable basis; and (2) if a Responsible Organization does not have an identified, billed toll free subscriber before switching a number from reserved or assigned to working status, then there is a rebuttable presumption that the Responsible Organization is warehousing numbers. Responsible Organizations that warehouse numbers will be subject to penalties.

ACCESS SERVICE

6. **Switched Access Service** (Cont'd)

6.2 **Switched Access Service Arrangements** (Cont'd)

6.2.10 **Toll Free Data Base Access Service** (Cont'd) (T)

(A) Description (Cont'd)

(5) The Federal Communications Commission (FCC) has concluded that hoarding, defined as the acquisition of more toll free numbers than one intends to use for the provision of toll free service, as well as the sale of a toll free number by a private entity for a fee, is contrary to the public interest in the conservation of the scarce toll free number resource and contrary to the FCC's responsibility to promote the orderly use and allocation of toll free numbers.

ACCESS SERVICE

6. **Switched Access Service** (Cont'd)

6.2 **Switched Access Service Arrangements** (Cont'd)

6.2.10 **Toll Free Data Base Access Service** (Cont'd)

(B) Optional Features

(1) Common Switching Optional Features

(a) Automatic Number Identification (ANI)
(b) Dial Pulse Address Signaling
(c) Revertive Pulse Address Signaling
(d) Delay Dial Start-Pulsing Signaling
(e) Immediate Dial Pulse Address Signaling
(f) Panel Call Indicator Address Signaling
(g) Alternate Traffic Routing
(h) SS7 Out of Band Signaling

(2) Local Transport Optional Features

(a) Supervisory Signaling

(D)

(D)

(D)
|
|
|
|
|
|
|
|
|
|
(D)

ACCESS SERVICE

6. **Switched Access Service** (Cont'd)

6.2 **Switched Access Service Arrangements** (Cont'd)

6.2.10 **Toll Free Data Base Access Service** (Cont'd)

(C) Transmission Specifications (T)

(D)
|
|
|
|
|
(D)

(D)

Toll Free Data Base Access Service is provided with either Type A, Type B or Type C Transmission Specifications as follows: (C)

- When routed directly to the end office either Type B or C is provided.

- When routed to a Telephone Company access tandem only Type A is provided.

- Type A is provided on the transmission path from the Telephone Company access tandem to the end office.

Type C Transmission specifications are provided with Interface Group I. Type A and Type B Transmission Specifications are provided with interface Groups 2, 6, 8, 9 and 10.

Type DA Data Transmission Parameters are provided for the transmission path between the customer's premises and the Telephone Company access tandem and between the Telephone Company access tandem and the end office. Type DB Data Transmission Parameters are provided for the transmission path between the customer's premises and the end office when directly routed to the end office.

ACCESS SERVICE

6. **Switched Access Service** (Cont'd)

6.2 **Switched Access Service Arrangements** (Cont'd)

6.2.10 **Toll Free Data Base Access Service** (Cont'd)

(D) Toll Free Data Base Query Service

(1) Toll Free Data Base Query Service, offered in conjunction with Toll Free Data Base Access Service, performs the Toll Free customer identification function, as described in 6.2.5(A)(1), to determine the customer to whom Toll Free calls must be routed. For all 1+Toll Free Code-NXX-XXXX calls, originated by an end user, the Telephone Company will perform the customer identification function using a Telephone Company Toll Free Data Base to screen the dialed ten digits of the Toll Free call to determine the customer selected by the Toll Free subscriber to carry that Toll Free call. If the Toll Free call originates from an end office not equipped to provide the customer identification function, the call will be routed to a Telephone Company access tandem equipped to provide the customer identification function. Once customer identification has been established through Toll Free Data Base Query Service, the Toll Free call will be routed to the selected customer for completion.

(2) Basic Toll Free Data Base Queries provide instructions to route 1+Toll Free Code-NXX-XXXX calls on a simple call turn around basis to one particular customer or to different customers based on the LATA in which the Toll Free call originates.

(3) Premium Toll Free Data Base Queries provide instructions to route 1+Toll Free Code-NXX-XXXX calls to:

(a) Different customers based on time of day, day of week, or based on number of calls allocated by Toll Free subscriber selected percentages.

(b) Different terminating locations based on time of day, day of week, or based on number of calls allocated by Toll Free subscriber selected percentages.

(c) Different telephone numbers in NANP format based on the Toll Free subscriber's specific requirements. (C)

ACCESS SERVICE

6. **Switched Access Service** (Cont'd)

6.2 **Switched Access Service Arrangements** (Cont'd)

6.2.10 **Toll Free Data Base Access Service** (Cont'd)

(D) Toll Free Data Base Query Service (Cont'd)

The Toll Free subscriber is responsible for arranging the entry of the various routing instructions discussed herein into the Number Administration Service Center's (NASC's) Service Management System (SMS).

Rate regulations and charges applicable to Toll Free Data Base Query Service appear in 6.5.3(C) and 6.6.

6.2.11 **900 Access Service**

(A) Description

(1) 900 Access Service is an originating trunk side service that provides for the forwarding of end user dialed 900-NXX-XXXX calls to a customer via a Telephone Company designated switch capable of performing a customer identification function. The customer identification function determines the customer to which the 900 call is routed by the Telephone Company.

The customer identification function will be available at suitably equipped end offices or Telephone Company access tandems. Once customer identification has been established, the call will be routed to the customer. 900 Access Service may be provided via 900 Access Service switched trunk groups or in conjunction with a customer's FGD or (D)
BSA-D Switched Access Service. (D)

(2) If the customer's 900 Access traffic originates from an end office not equipped to perform the customer identification function, the call will be routed to the nearest office at which the function is available. Once customer identification has been established, the call will be routed to the customer.

Unless prohibited by technical limitations, the customer's 900 Access Service traffic may, at the option of the customer, be combined in the same trunk group arrangement as the customer's FGD or BSA-D Access Service (D)
traffic. When required by technical limitations a separate trunk group must be established for 900 Access Service.

ACCESS SERVICE

6. **Switched Access Service** (Cont'd)

6.2 **Switched Access Service Arrangements** (Cont'd)

6.2.11 **900 Access Service** (Cont'd)

(A) Description (Cont'd)

(3) 900 Access Service is provided as trunk side switching through the use of end offices or Telephone Company access tandems. 900 Access Service originating from equal access end offices with the customer identification function will be provided using Feature Group D signaling as set forth in 6.2.4 (A)(2) and (3) or BSA-D signaling as set forth in 6.2.8(A)(2) and (3). When Feature Group D signaling is provided, ANI will be provided in the same manner in which ANI is provided for Feature Group D as set forth in 6.3.2 (F). When BSA-D signaling is provided, ANI may be provided in the same manner in which ANI is provided for BSA-D as set forth in 6.2.14.

(D)
|
|
|
(D)

In cases where 900 Access Service will be used for mass calling events, the customer is required to provide notice of the event to the Telephone Company. Notification must be provided at least two business days prior to the event. As a result of such notification, the Telephone Company may implement protective controls to ensure acceptable service levels.

Failure to notify the Telephone Company of such events may subject the 900 Access Service to discontinuance as specified in Section 2.2.1.

Calls to a 900 number dialed via 1+ from coin telephones, 101XXXX, Inmate Service and Hotel/Motel Service will be blocked. Calls to a 900 number dialed via 0+ or 0- will be blocked. Calls to a 900 number dialed via 0+ will be (D)
unblocked if an ASR requesting unblocking is submitted to the Telephone Company by the customer.

ACCESS SERVICE

6. **Switched Access Service** (Cont'd)

6.2 **Switched Access Service Arrangements** (Cont'd)

6.2.11 **900 Access Service** (Cont'd)

(B) Optional Features

(1) Common Switching Optional Features

(a) Automatic Number Identification (ANI)
(b) Dial Pulse Address Signaling
(c) Revertive Pulse Address Signaling
(d) Delay Dial Start-Pulsing Signaling
(e) Immediate Dial Pulse Address Signaling
(f) Panel Call Indicator Address Signaling
(g) Alternate Traffic Routing
(h) SS7 Out of Band Signaling
(i) Customer Identification Function
(j) Tandem Switch Signaling

(2) Local Transport Optional Features

(a) Supervisory Signaling

(D)

(D)

(D)

ACCESS SERVICE

6. **Switched Access Service** (Cont'd)

6.2 **Switched Access Service Arrangements** (Cont'd)

6.2.11 **900 Access Service** (Cont'd)

(C) Transmission Specifications (T)

(D)
|
|
|
|
|
(D)

(D)

900 Access Service is provided with either Type A, Type B or Type C Transmission Specifications as follows: (C)

- When routed directly to the end office either Type B or C is provided.

- When routed to a Telephone Company access tandem only Type A is provided.

- Type A is provided on the transmission path from the Telephone Company access tandem to the end office.

Type C Transmission specifications are provided with Interface Group 1. Type A and Type B Transmission Specifications are provided with Interface Groups 2, 6, 8, 9 and 10.

Type DA Data Transmission Parameters are provided for the transmission path between the customer's premises and the Telephone Company access tandem and between the Telephone Company access tandem and the end office. Type DB Data Transmission Parameters are provided for the transmission path between the customer's premises and the end office when directly routed to the end office.

ACCESS SERVICE

6. **Switched Access Service** (Cont'd)

6.2 **Switched Access Service Arrangements** (Cont'd)

6.2.12 **Common Channel Signaling System 7 Access Service**

(A) Description

Common Channel Signaling System 7 (CCS7) Access service provides an interconnection between the Common Channel Signaling (CCS) network of the Telephone Company and a customer's CCS network or SS7 capable voice/data network using Dedicated Switched Access facilities and Signal Transfer Point (STP) Ports. CCS7 Access service provides the connection between the Telephone Company's STP and the customer's premises to allow customers to access Telephone Company provided services requiring CCS7 connectivity. CCS7 Access service provides for the transmission of network control and other signaling information from the Telephone Company's STP, via the STP Port and Dedicated Switched Access facilities, to the customer's premises. The technical interface specifications are as described in Technical Reference GR-905-CORE, Issue 11. The location of the Telephone Company's STP switches is indicated in (D) following and in NECA Tariff FCC No. 4. (C)(x) (T)

CCS7 Access Service may interconnect a customer's paired STPs to the Telephone Company's mated STP pairs. With this arrangement, the customer is connected to two STPs and four STP Ports via four Dedicated Switched Access facilities. The following diagram depicts a generic view of this arrangement.

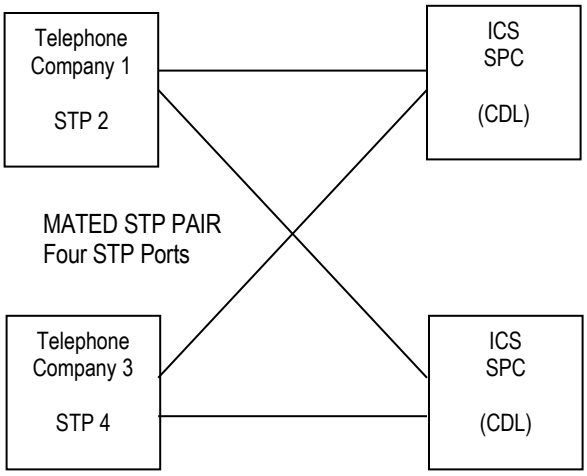

----- Dedicated Switched Access Facility

(x) GR-905-CORE, Issue 11, replaces TR-TSV-905 in its entirety.

ACCESS SERVICE

6. **Switched Access Service** (Cont'd)

6.2 **Switched Access Service Arrangements** (Cont'd)

6.2.12 **Common Channel Signaling System 7 Access Service** (Cont'd)

(A) Description (Cont'd)

CCS7 Access service may also interconnect a Customer Signaling Point or Service Switching Point to the mated STP pairs at the locations specified. With this arrangement, the customer is connected to two STPs and two STP Ports via two Dedicated Switched Access facilities. (x)

The following diagram depicts a generic view of this arrangement. (x)

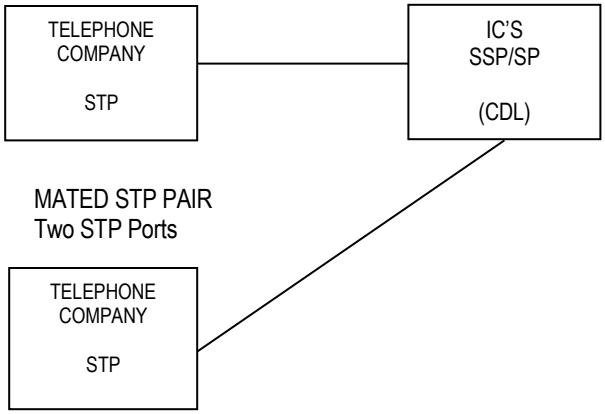

- - - - Dedicated Switched Access Facility

(B) Dedicated Switched Access

Dedicated Switched Access provides a dedicated transmission path to connect a customer's premises to the Telephone Company's Signal Transfer Point (STP). This service is provided in 56 Kbps digital or DS1 formats only. The 56 Kbps format provides connection to one port at the STP and the DS1 format provides an equivalence of 24, 56 Kbps facilities for connection of up to 24 ports at the STP. Dedicated Switched Access has two rate elements: Dedicated Switched Access Line (DSAL) and Dedicated Switched Access Transport (DSAT). (x)

(x) Issued under authority of Special Permission No. 07-019 of the Federal Communications Commission to reinstate material presently in effect.

ACCESS SERVICE

6. **Switched Access Service** (Cont'd)

6.2 **Switched Access Service Arrangements** (Cont'd)

6.2.12 **Common Channel Signaling System 7 Access Service** (Cont'd)

(B) Dedicated Switched Access (Cont'd)

(1) The DSAL rate element provides the transmission path between a customer's premises and its serving wire center. A 56 Kbps or DS1 interface is provided at the customer's premises as part of the DSAL. The 56 Kbps interface provides for the simultaneous two-way transmission of sequential bipolar data signals at a transmission speed of 56 Kbps over four-wire facilities. The DS1 interface provides for the simultaneous two-way transmission of sequential data signals at a transmission speed of 1.544 Mbps. This rate element is not distance nor usage sensitive. (x)

(2) The DSAT rate element provides the transmission path between the serving wire center of the customer's premises and the STP. This rate element is distance sensitive on a per airline mile basis, but is not usage sensitive. Where the serving wire center of the customer's premises and the STP location are the same, the DSAT rate element does not apply. Airline miles will be calculated using the V&H coordinates method outlined in NECA Tariff FCC No. 4 between the customer's serving wire center and the STP. (x)

(C) STP Port Termination

The STP Port Termination provides the means to terminate the Dedicated Switched Access facility at the STP. One STP Port Termination is required for each 56 Kbps or 56 Kbps equivalent facility. (x)

(x) Issued under authority of Special Permission No. 07-019 of the Federal Communications Commission to reinstate material presently in effect.

ACCESS SERVICE

6. **Switched Access Service** (Cont'd)

6.2 **Switched Access Service Arrangements** (Cont'd)

6.2.12 **Common Channel Signaling System 7 Access Service** (Cont'd)

(D) STP Locations

CCS7 Access Service interconnects a customer's paired STPs to the Telephone Company's STP mated pairs for SS7 Out of Band Signaling for customers in the following locations:

Telephone Company wire centers located within the LATAs listed below are identified in NECA Tariff FCC No. 4. Information concerning interLATA CCS7 Access Service is found in Section 8.18 following. (N)

STP	Customers Served	
Manassas and Occoquan, VA	LATAs 236, 244, 246, 248, 250, 252, 927	(C)(x)
	in Virginia	(C)(x)
		| |
Erie and Edinboro, PA	LATA 230	(C)(x)
	in Pennsylvania	(C)(x)
		| |
York and Dover, PA	LATAs 133, 226, 228 and	(C) |
	232 in Pennsylvania	(M)(x)

(x) Certain material on this page formerly appeared on 3rd Revised Page 6-60.

(This page filed under Transmittal No. 1368.)

ACCESS SERVICE

6. **Switched Access Service** (Cont'd)

6.2 **Switched Access Service Arrangements** (Cont'd)

6.2.12 **Common Channel Signaling System 7 Access Service** (Cont'd)

Certain material previously found on this page can now be found on 4th Revised Page 6-59.

(This page filed under Transmittal No. 1368.)

ACCESS SERVICE

6. **Switched Access Service** (Cont'd)

6.2 **Switched Access Service Arrangements** (Cont'd)

6.2.12 **Common Channel Signaling System 7 Access Service** (Cont'd)

(E) SS7 Transport

SS7 Transport provides for message transport in support of services which require receiving and terminating signaling information using the SS7 protocol. SS7 Transport will route messages to the appropriate global title address or to the signaling point code address based on STP translations. Customer STP interconnection can be obtained by interconnection at any of the Telephone Companies STP pair locations as shown in this section.

Interconnection at primary STP locations will provide for SS7 transport to other primary STP locations within the Telephone Companies SS7 Network. The Telephone Companies primary STP locations are:

Erie and Edinboro, Pennsylvania (N)
York and Dover, Pennsylvania (N)

Manassas and Occoquan, Virginia

For the operating territory of Verizon South Inc., SS7 Transport is comprised of two rates. One rate is applicable for SS7 Transport between Primary STP locations. The second rate is applicable for SS7 Transport between a Primary STP location and any local STP location. For the operating territory of Verizon North LLC, SS7 Transport (C)
terms and conditions, rates and charges are set forth in The Verizon Telephone Companies Tariff FCC No. 14. (C)(x)

A customer ordering SS7 Transport must, at minimum, subscribe to the Telephone Company's Common Channel Signaling System 7 (CCS7) Access Service as described in this section. (T)

(x) Issued under authority of Special Permission No. 18-01 of the Federal Communications Commission.

ACCESS SERVICE

6. **Switched Access Service** (Cont'd)

6.2 **Switched Access Service Arrangements** (Cont'd)

6.2.12 **Common Channel Signaling System 7 Access Service** (Cont'd)

(x)

(x) Issued under authority of Special Permission No. 07-019 of the Federal Communications Commission to reinstate material presently in effect.

(This page filed under Transmittal No. 834.)

ACCESS SERVICE

6. **Switched Access Service** (Cont'd)

6.2 **Switched Access Service Arrangements** (Cont'd)

6.2.12 **Common Channel Signaling System 7 Access Service** (Cont'd)

(x)

(x) Issued under authority of Special Permission No. 07-019 of the Federal Communications Commission to reinstate material presently in effect.

(This page filed under Transmittal No. 834.)

ACCESS SERVICE

6. **Switched Access Service** (Cont'd)

6.2 **Switched Access Service Arrangements** (Cont'd)

6.2.13 **500 Access Service**

(A) Description

(1) 500 Access Service is an originating trunk side service that provides for the forwarding of end user dialed 500-NXX-XXXX calls to a customer via a Telephone Company designated switch capable of performing a customer identification function. The customer identification function determines the customer to which the 500 call is routed by the Telephone Company.

The customer identification function will be available at suitably equipped end office or Telephone Company access tandem switches. Once customer identification has been established, the call will be routed to the customer. 500 Access Service may be provided via 500 Access Service switched trunk groups or in conjunction with a customer's FGD or BSA-D Switched Access Service. (D)

(2) If the customer's 500 Access traffic originates from an end office switch not equipped to perform the customer identification function, the call will be routed to the nearest office at which the function is available. Once customer identification has been established, the call will be routed to the customer.

Unless prohibited by technical limitations, the customer's 500 Access Service traffic may, at the option of the customer, be combined in the same trunk group arrangement as the customer's FGD or BSA-D Access Service traffic. When required by technical limitations a separate trunk group must be established for 500 Access Service. (D)

ACCESS SERVICE

6. **Switched Access Service** (Cont'd)

6.2 **Switched Access Service Arrangements** (Cont'd)

6.2.13 **500 Access Service** (Cont'd)

(A) Description (Cont'd)

(3) 500 Access Service is provided as trunk side switching through the use of end office or Telephone Company access tandem switch trunk equipment. 500 Access Service originating from equal access end offices with the customer identification function will be provided using Feature Group D signaling as set forth in 6.2.4 (A)(2) and (3) or BSA-D signaling as set forth in 6.2.8(A)(2) and (3). When Feature Group D signaling is provided, ANI will be provided in the same manner in which ANI is provided for Feature Group D as set forth in 6.3.2 (F). When BSA-D signaling is provided, ANI may be provided in the same manner in which ANI is provided for BSA-D as set forth in 6.2.14. (D) | | | (D)

6. **Switched Access Service** (Cont'd)

6.2 **Switched Access Service Arrangements** (Cont'd)

6.2.13 **500 Access Service** (Cont'd)

(B) Optional Features

(1) Common Switching Optional Features

(a) Automatic Number Identification (ANI)
(b) Dial Pulse Address Signaling
(c) Revertive Pulse Address Signaling
(d) Delay Dial Start-Pulsing Signaling
(e) Immediate Dial Pulse Address Signaling
(f) Panel Call Indicator Address Signaling
(g) Alternate Traffic Routing
(h) SS7 Out of Band Signaling
(i) Customer Identification Function
(j) Tandem Switch Signaling

(2) Local Transport Optional Features

(a) Supervisory Signaling

(D)

(D)

(D)

ACCESS SERVICE

6. **Switched Access Service** (Cont'd)

6.2 **Switched Access Service Arrangements** (Cont'd)

6.2.13 **500 Access Service** (Cont'd)

(C) Transmission Specifications (T)

(D)
|
|
|
|
|
(D)

(D)

500 Access Service is provided with either Type A, Type B or Type C Transmission Specifications as follows: (C)

- When routed directly to the end office either Type B or C is provided.

- When routed to a Telephone Company access tandem only Type A is provided.

- Type A is provided on the transmission path from the Telephone Company access tandem to the end office.

Type C Transmission specifications are provided with Interface Group 1. Type A and Type B Transmission Specifications are provided with Interface Groups 2, 6, 8, 9 and 10.

Type DA Data Transmission Parameters are provided for the transmission path between the customer's premises and the Telephone Company access tandem and between the Telephone Company access tandem and the end office. Type DB Data Transmission Parameters are provided for the transmission path between the customer's premises and the end office when directly routed to the end office.

ACCESS SERVICE

6. **Switched Access Service** (Cont'd)

6.2 **Switched Access Service Arrangements** (Cont'd)

6.2.14 **Basic Service Elements**

The following Basic Service Elements (BSEs) are chargeable unbundled service options available only with Basic Serving Arrangements. The Telephone Company makes no guarantee that these BSE's will be available in all locations. Rate regulations and charges applicable to BSEs appear in 6.5.15 and 6.6.

(A) Alternate Traffic Routing - BSE

This BSE provides the capability of directing originating traffic from an end office (or appropriately equipped access tandem) via a trunk group (the "high usage" group) to a CDL until that group is fully loaded, and then delivering additional originating traffic (the "overflowing" traffic) from the same end office or access tandem to a different trunk group or groups (via one or more intermediate high usage groups) to one or more CDLs until the originating traffic is directed to a final group. The customer shall specify the last trunk CCS desired for the high usage group and each intermediate group.

When a BSA-D customer subscribes to TAS (Tandem Access Sectorization) and Alternate Traffic Routing, the "final" trunk group and any intermediate trunk groups carrying additional originating overflowing traffic must terminate at the same CDL as does the "high usage" trunk group.

Alternate Traffic Routing - BSE is provided in suitably equipped end office or access tandem switches and is available with BSA-B and BSA-D. (D)

ACCESS SERVICE

6. **Switched Access Service** (Cont'd)

6.2 **Switched Access Service Arrangements** (Cont'd)

6.2.14 **Basic Service Elements** (Cont'd)

(B) Automatic Number Identification (ANI) - BSE

This BSE provides the automatic transmission of a seven or ten digit number and information digit to the CDL for calls originating in the Access Area to identify the calling station. The ANI arrangement will be associated with all individual transmission paths in a trunk group when this arrangement is provided.

These information digits shall only be used for billing and collection, routing, screening, and completion of the originating subscriber's call or transaction or for service directly related to the originating subscriber's call or transaction.

The ANI provided shall not be reused or resold without first notifying the originating telephone subscriber and obtaining affirmative consent of the subscriber for reuse or resale.

Unless the originating subscriber has given consent for the reuse or resale, any information provided shall not be used for any purpose other than:

- performing the services or transactions that are subject of the originating subscriber's call;
- ensuring network performance security, and the effectiveness of call delivery;
- compiling, using and disclosing aggregate information; and,
- complying with applicable laws.

The above restrictions shall not prevent the subscriber to the ANI Arrangement from using information acquired from an ANI Arrangement, such as the telephone number or information derived from analysis of the characteristics of calls received through the ANI Arrangement, to offer a product or service that is directly related to the products or services previously purchased by a customer of the ANI Arrangement subscriber.

ACCESS SERVICE

6. **Switched Access Service** (Cont'd)

6.2 **Switched Access Service Arrangements** (Cont'd)

6.2.14 **Basic Service Elements** (Cont'd)

(B) Automatic Number Identification (ANI) - BSE (Cont'd)

The seven digit ANI telephone number is available with BSA-B. It will be transmitted on all calls except those identified as ANI failure. The ten digit ANI telephone number is only available with BSA-D. When BSA-D with SS7 (D) Out of Band Signaling is specified, the customer may order an ANI equivalent by ordering the Charge Number parameter as described in 6.3.2(Z) at the rates for ANI-BSE as shown in 6.6. The ten digit ANI telephone number consists of the Numbering Plan Area (NPA) plus the seven digit ANI telephone number. The ten digit ANI telephone number will be transmitted on all calls except those identified as ANI failure in which case only the NPA will be (D) transmitted (in addition to the information digit described below). The ANI telephone number is the listed telephone number of the end user that originates the call.

Where ANI cannot be provided, information digits will be provided to the customer. The information digits are used (D) in the following situations:

(1) Telephone number is the station billing number - no special treatment is required.

ACCESS SERVICE

6. **Switched Access Service** (Cont'd)

6.2 **Switched Access Service Arrangements** (Cont'd)

6.2.14 **Basic Service Elements** (Cont'd)

(B) Automatic Number Identification (ANI) - BSE (Cont'd)

(D)
(D)

(2) ANI failure has occurred in the end office switch which prevents identification of calling telephone number - number must be obtained by operator or in some other manner. (T)

(3) The configuration of the line requires special screening or handling by the customer, or (T)

(4) Call is an Automatic Identified Outward Dialed (AIOD) call from end user terminal equipment. (T)

These ANI information digits are available with BSA-B and BSA-D only. In addition, the following information digits are available with BSA-D only:

(a) InterLATA Area restricted - telephone number is identified line.

(b) InterLATA Area restricted - line requires special screening or handling by the customer.

These information digits will be transmitted as agreed to by the customer and the Telephone Company.

(C) User Transfer - BSE

This option, available with BSA-A, provides the ability to temporarily hold an established call, originate another call to a third party, and then redirect the first call to the third party. When a call has been transferred, the original line is cleared to place or receive another call.

ACCESS SERVICE

6. **Switched Access Service** (Cont'd)

6.2 **Switched Access Service Arrangements** (Cont'd)

6.2.14 **Basic Service Elements** (Cont'd)

(D) Hunt Group Arrangement - BSE

This BSE, available only with BSA-A, provides the ability to sequentially access one of two or more line side connections in the originating direction, when the access code of the line group is dialed. This BSE contemplates one access code (i.e., telephone number) per arrangement. This BSE also provides the ability to sequentially access one of two or more lines in the terminating direction, when the hunting number of the line group is forwarded from the customer to the Telephone Company.

(E) Queuing - BSE

This BSE is available only with BSA-A in conjunction with the Uniform Call Distribution (UCD) BSE and may only be provided in Telephone Company electronic end offices.

When all terminals in a UCD Arrangement are busy, queuing allows for an incoming call to be placed in queue to await an available terminal in the UCD arrangement. When a call is placed in queue, audible ringing is returned to the customer and no further indication is sent until a terminal completes the call. The call that has been in queue the longest will be the first call handled when a terminal becomes available. The maximum number of calls that can be placed in queue is dependent upon the total number of lines in the multiline hunt group. If the incoming call cannot be placed in queue, the calling party will receive a busy tone.

(F) Uniform Call Distribution - BSE

This BSE provides a type of multiline hunting arrangement which evenly distributes calls among the available lines in a hunt group. Where available, this arrangement is provided with originating use for BSA-A and terminating use for Special Access Lines.

ACCESS SERVICE

6. **Switched Access Service** (Cont'd)

6.2 **Switched Access Service Arrangements** (Cont'd)

6.2.14 **Basic Service Elements** (Cont'd)

(G) Simplified Message Desk Interface (SMDI) - BSE (T)

This option provides call-related information for calls utilizing a BSE hunt group arrangement. SMDI provides the capability for delivering the called number, the calling number, and a call forwarding indicator (i.e., call forwarding busy, call forwarding don't answer, or direct call). This information is transmitted to the CDL utilizing a DNAL (Section 6.2.9). In addition, where customer equipment exists, SMDI will allow a customer to activate a message waiting indicator to the called number. The message waiting indicator includes Message Waiting Indication - Audible or Message Waiting Indication - Audible Ring Burst.

The customer shall provide the appropriate Customer Premises Equipment (CPE) to store, display or print the transmitted call status information as well as equipment to activate or deactivate the message waiting indicator. The Telephone Company assumes no liability and will be held harmless for any incompatibility of their CPE to perform satisfactorily with this feature. This BSE, available with DNA, is provided from suitably equipped end offices. The customer is responsible for providing a modem at the CDL which interfaces with the Telephone Company equipment at 1200 baud ASCII.

(H) Premier Messaging Services Interface (PMSI) aka Inter-Switch Voice Messaging (ISVM) - BSE (N)

Premier Messaging Services Interface (PMSI) is an optional enhancement to Simplified Message Desk Interface (SMDI). PMSI is similar to Simplified Message Desk Interface (SMDI), except that it utilizes the Signaling System 7 (SS7) Network to pass calling and called number information between central offices. With PMSI capability, the customer is not required to obtain a Voice Grade Dedicated Network Link to each Telephone Company central office switch where messaging capability is desired. With PMSI, the customer can provide messaging capability to all end users in a LATA area provided those end users reside in central offices that are interconnected via SS7 and are equipped with the required software. PMSI requires SMDI service between the customer's equipment and at least one central office. A monthly recurring charge, as set forth in 6.6.1 following, applies per arrangement and is in addition to charges for SMDI. (N)

Certain material formerly appearing on this page currently appears on 1st Revised Page 6-72.

ACCESS SERVICE

6. **Switched Access Service** (Cont'd)

6.2 **Switched Access Service Arrangements** (Cont'd)

6.2.14 **Basic Service Elements** (Cont'd)

(I) Signaling System 7 Message Waiting Indicator (SS7MWI) Signaling Service - BSE

(1) Signaling System 7 Message Waiting Indicator (SS7MWI) Signaling Service permits the customer to provide Signaling System 7 (SS7) Message Waiting Indicator (MWI) Transaction Capabilities Application Part (TCAP) messages to the Telephone Company for delivery to Telephone Company switches that serve suitably equipped lines of those end users who subscribe to the customer's voice messaging service. MWI TCAP messages are originated by the customer's equipment, (i.e., Voicemail Platform) and addressed and delivered to a designated Telephone Company Signaling Transfer Point (STP) pair in the LATA in which the customer's subscribing end user receives service. (C)

(2) The Telephone Company uses its SS7 capabilities to determine the switch serving the end user, and to deliver the MWI TCAP message to that switch. The message causes the switch to set or reset MWI on the end user's line. These messages allow the customer to notify its end user that voice messages are awaiting retrieval, or to clear the message waiting notification once the end user has acknowledged those messages.

(3) SS7MWI Signaling Service is offered only to provide signaling to Telephone Company switches within the LATA in which the signaling was handed off to the Telephone Company, and will be available only in LATAs where the Telephone Company has STPs available to accept SS7 messages associated with the service. A list of LATAs where the Telephone Company has STPs follows in this section. The customer must hand-off only those messages that are intended for end users served by capable Telephone Company switches in that LATA.

(4) SS7MWI Signaling Service is not available in LATAs where the Telephone company does not have STPs. In those LATAs, services utilizing Simplified Message Desk Interface (SMDI) in this section preceding, 6.2.14(G), or Premier Messaging Service Interface (PMSI) service as set forth in this section preceding, 6.2.14(H), can be used to communicate message waiting status to end users' lines. In the event that STPs are deployed in any of those LATAs subsequent to issuance of this tariff, the Telephone Company will offer the service in those LATAs. In the event that the Telephone Company removes STPs from one or more LATAs, it can no longer offer the service in that LATA. In such event, the Telephone Company will provide at least 90 days prior notice of the pending removal of the STPs. Following such removal, the customer will have the option of purchasing Simplified Message Desk Interface (SMDI) in this section preceding, 6.2.14(G), or Premier Messaging Service Interface (PMSI) service as set forth in this section preceding, 6.2.14(H).

ACCESS SERVICE

6. **Switched Access Service** (Cont'd)

6.2 **Switched Access Service Arrangements** (Cont'd)

6.2.14 **Basic Service Elements** (Cont'd)

(I) Signaling System 7 Message Waiting Indicator (SS7MWI) Signaling Service (Cont'd)

(5) Additionally, SS7MWI Signaling Service can only be used to update MWI for end users served from suitably equipped switching equipment in designated LATA STPs which are capable of responding appropriately to MWI TCAP messages.

(6) The customer is responsible for obtaining SS7 interconnection directly from Verizon under the provisions of Section 6.2.12 of this tariff. The customer of record for the SS7 interconnection shall also be the customer of record for SS7MWI Signaling Service. In the event that the customer chooses to use another SS7 provider to interconnect with Verizon, the customer shall be unable to receive the SS7MWI Signaling Service, and will have to make separate arrangements with the SS7 provider.

(7) SS7MWI Signaling Service shall be ordered separately for each STP pair in each LATA requiring the service. Each such order will be considered a messaging arrangement. Each ASR submitted will contain no more than two (a Primary and a Secondary) Voicemail Platforms per messaging arrangement. If a customer seeks to connect more than two Voicemail Platforms to a given Verizon STP pair, an additional ASR will be required for each additional pair of Voicemail Platforms per STP pair in a LATA.

(8) A monthly recurring charge as set forth in Section 6.6 applies per messaging arrangement to allow for the transmission of SS7MWI Signaling Service.

(9) LATAs Served:

LATA	LATA NAME	
		(D)
		(D)
		(D)
		(D)
		(D)
552	DALLAS TEXAS	
560	HOUSTON TEXAS	
		(D)
722	SAN FRANCISCO CA	
730	LOS ANGELES CA	
924	ERIE PENNSYLVANIA	
961	SAN ANGELO TEXAS	(Z)

ACCESS SERVICE

6. **Switched Access Service** (Cont'd)

6.2 **Switched Access Service Arrangements** (Cont'd)

6.2.14 **Basic Service Elements** (Cont'd)

(J) Caller Identification - Number (ICLID) BSE (USOC - NUB) (T)

This BSE provides the customer with the calling party's directory number at the time the call is received. The calling number is transmitted to the customer during the first silent interval of the ringing cycle. The number is displayed on customer-provided equipment. (M)

Where available, this arrangement is provided with originating BSA-A as a nonchargeable option. (M)

(K) Remote Call Forwarding - BSE (T)

This BSE is a service that utilizes a seven digit Directory Number (DN) to a automatically forward all incoming calls to another DN. The forwarded to number can be in the same central office switch or in another central office switch.

The remote call forwarding directory number is not directly associated with an access connection arrangement, but rather is a software translation programmed within the central office switch. All calls dialed to that directory number will forward to another number automatically. The subscriber to this capability does not have a station set for termination of calls made to their remote call forwarding number. Where available, this arrangement is provided with BSA-A and FGA.

(L) Direct Inward Dialing (DID) - BSE (T)

This BSE provides a two or four wire DID termination with line treatment at the first point of switching that permits the Dial Tone Central Office Switch to deliver all or part of the called number to the customer premises at the time the call is established. Multifrequency (MF), Dual Tone Multifrequency (DTMF) or Dial Pulse address signaling is used by the Telephone Company to deliver only the called telephone number to the customer premises. No other address signaling will be delivered to the customer premises. The type of signaling utilized depends on the Dial Tone Office switching equipment available. If additional address signaling is required by the customer, it must be provided by the customer's end user using inband tone address signals which will not be regenerated by the Telephone Company and will be subject to the ordinary transmission capabilities of the Switched Transport provided.

This BSE is only available with new BSA-A arrangements and only in the originating direction. The customer must order a DID Trunk Termination and the first group of 20 DID numbers to be associated with the DID Termination in addition to BSA-A service. Additional groups of 20 DID telephone numbers are available. If the grade of service at the group busy hour of the DID trunk group is less than P.05 for two consecutive months, the customer may be required to subscribe to additional DID Trunk Terminations. The DID optional feature is only available as a stand alone BSE or optional feature, no other BSEs or optional features can be used in conjunction with it.

Material currently appearing on this page formerly appeared on Original Page 6-71.

ACCESS SERVICE

6. **Switched Access Service** (Cont'd)

6.2 **Switched Access Service Arrangements** (Cont'd)

6.2.14 **Basic Service Elements** (Cont'd)

(M) Billed Number Screening (BNS) - BSE (T)

This BSE prevents the billing of incoming collect and third number billed calls to a customer's telephone account.

The Telephone Company, upon request of the customer, shall confirm the Billed Number Screening service applied to their account.

Where available, this arrangement is provided with BSA-A and FGA.

(N) Controlink® Digital Channel Service (CLDCS) - BSE (T)

This BSE provides a digital common line connection between the CDL and the local serving wire center. The digital transmission rate available is either DS1 (1.544 Mbps) or DS3 (44.736 Mbps).

Controlink® Digital Channel Service will be used by the customer to aggregate the customer's telecommunication services onto a digital local loop.

This arrangement is provided on an Individual Case Basis (ICB) with BSA-D.

(O) Answer Supervision - BSE (T)

Answer Supervision is the line side functionality that provides an electrical signal to the calling end of a switched telephone connection when the called line goes off-hook. Customer-Owned Pay Telephone (COPT) Answer Supervision will be provided for use with Public Telephone Access Service as specified in the Company's local/general exchange tariff to assist in determining when billing for a specific call should commence.

ACCESS SERVICE

6. **Switched Access Service** (Cont'd)

6.3 **Optional Features**

Following are descriptions of the various optional features that are available in lieu of, or in addition to, the standard features provided with Switched Access Services. They are provided as either Local Transport, Common Switching or Transport Termination options.

6.3.1 **Local Transport Optional Features**

(A) Supervisory Signaling

Where the transmission parameters permit, and where signaling conversion is required by the customer to meet its signaling capability, the customer may order an optional supervisory signaling arrangement for each transmission path provided as follows:

- For Interface Groups 1 and 2

DX Supervisory Signaling,
E&M Type I Supervisory Signaling,
E&M Type II Supervisory Signaling, or
E&M Type III Supervisory Signaling

- For Interface Group 2

SF Supervisory Signaling, or
Tandem Supervisory Signaling

- For Interface Groups 6, 8, 9 and 10 (C)

At the option of the customer, these Interface Groups may be provided with individual transmission path SF supervisory signaling where such signaling is available in Telephone Company central offices. Generally such signaling is available only where the entry switch provides an analog (i.e., non digital) interface to the transport termination.

These optional supervisory signaling arrangements are not available in conjunction with Signaling System 7 (SS7) Out of Band Signaling.

(B) Customer Specified Entry Switch Receive Level

This feature allows the customer to specify the receive transmission level at the first point of switching. The range of transmission level which may be specified is described in Technical Reference GR-334-CORE, Issue 1. This feature is available with Interface Groups 2, 6, 8, 9 and 10 for FGA, FGB, BSA-A and BSA-B. (C)

ACCESS SERVICE

6. **Switched Access Service** (Cont'd)

6.3 **Optional Features** (Cont'd)

6.3.2 **Common Switching Optional Features**

(A) Call Denial on Line or Hunt Group

This option allows for the screening of terminating Feature Group A and BSA-A calls. The following screening arrangements are available with this option:

1) Screening of terminating calls for completion to only 411, 611, 911, 555-1212 all valid NXXs associated with the end offices within the LATA, i.e., the call cannot be further switched or routed out of the LATA.

2) Screening of terminating calls within the Feature Group A or BSA-A Access Area for completion to only 411, 611, 911, Toll Free, 555-1212, and a Telephone Company specified set of NXXs within the Telephone (T) Company local exchange calling area of the dial tone office in which the arrangement is provided.

All other calls are routed to a reorder tone or recorded announcement. Arrangement 1 is provided where available. Arrangement 2 is provided in all Telephone Company electronic end offices and, where available, in electromechanical end offices. These options are available with Feature Group A and BSA-A.

ACCESS SERVICE

6. **Switched Access Service** (Cont'd)

6.3 **Optional Features** (Cont'd)

6.3.2 **Common Switching Optional Features** (Cont'd)

(B) Service Code Denial on Line or Hunt Group

This option allows for the screening of terminating calls, 0-, 555 and N11 (e.g., 411, 611, and 911). This feature is provided where available in all Telephone Company electronic end offices and electromechanical end offices. It is available with Feature Group A and BSA-A.

(C) Hunt Group Arrangement

The Hunt Group Arrangement is available with FGA as a nonchargeable option. This feature is available with BSA-A as a chargeable BSE as specified in 6.2.13 and 6.5.15.

This option provides for:

- the ability to sequentially access one of two or more Feature Group A line side connections in the originating direction, when the access code of the line group is dialed, and

- the ability to sequentially access one of two or more Voice Grade Circuits (e.g., Toll Free Service Circuits) in the terminating direction, when the hunting number of the line group is forwarded from the customer to the Telephone Company. (T)

ACCESS SERVICE

6. **Switched Access Service** (Cont'd)

6.3 **Optional Features** (Cont'd)

6.3.2 **Common Switching Optional Features** (Cont'd)

(D) Uniform Call Distribution Arrangement

This option provides a type of multiline hunting arrangement which provides for an even distribution of calls among the available lines in a hunt group. Where available, this feature is provided in Telephone Company electronic end offices only. It is available for originating use with Feature Group A and for terminating use with Special Access used with a Switched Access Interface. This option is available with BSA-A as a chargeable BSE as shown in 6.2.14 and 6.5.15.

(E) Nonhunting Number for Use with Hunt Group or Uniform Call Distribution Arrangement

This option provides an arrangement for an individual line within a multiline hunt or uniform call distribution group that provides access to that line within the hunt or uniform call distribution group when it is idle or provides busy tone when it is busy, when the nonhunting number is dialed. Where available, this feature is provided in Telephone Company electronic end offices only. It is available with Feature Group A, BSA-A utilizing Uniform Call Distribution - BSE, and Special Access lines used with a Switched Access Interface.

(F) Automatic Number Identification (ANI)

This option provides the automatic transmission of a seven or ten digit number and information digits to the customer's premises for calls originating in the Access Area to identify the calling station. The ANI feature is an end office software function which is associated on a call-by-call basis with (1) all individual transmission paths in a trunk group routed directly between an end office and a customer's premises or, where technically feasible, with (2) all individual transmission paths in a trunk group between an end office and a Telephone Company access tandem, and a trunk group between a Telephone Company access tandem and a customer's premises. When Feature Group D is provided with SS7 Out of Band Signaling, the customer may obtain an ANI equivalent by ordering the Charge Number optional feature as described in 6.3.2(Z).

ACCESS SERVICE

6. **Switched Access Service** (Cont'd)

6.3 **Optional Features** (Cont'd)

6.3.2 **Common Switching Optional Features** (Cont'd)

(F) Automatic Number Identification (ANI) (Cont'd)

These information digits shall only be used for billing and collection, routing, screening, and completion of the originating subscriber's call or transaction or for service directly related to the originating subscriber's call or transaction.

The ANI provided shall not be reused or resold without first notifying the originating telephone subscriber and obtaining affirmative consent of the subscriber for reuse or resale.

Unless the originating subscriber has given consent for the reuse or resale, any information provided shall not be used for any purpose other than:

- performing the services or transactions that are subject of the originating subscriber's call;
- ensuring network performance security, and the effectiveness of call delivery;
- compiling, using and disclosing aggregate information; and,
- complying with applicable laws.

The above restrictions shall not prevent the subscriber to the ANI Arrangement from using information acquired from an ANI Arrangement, such as the telephone number or information derived from analysis of the characteristics of calls received through the ANI Arrangement, to offer a product or service that is directly related to the products or services previously purchased by a customer of the ANI Arrangement subscriber.

The seven digit ANI telephone number is available with Feature Group B. With these Feature Groups, technical limitations may exist in Telephone Company switching facilities which require ANI to be provided only on a directly trunked basis. ANI will be transmitted on all calls except those originating from coin stations and coinless pay (D) telephones using Feature Group B, or when an ANI failure has occurred.

ACCESS SERVICE

6. **Switched Access Service** (Cont'd)

6.3 **Optional Features** (Cont'd)

6.3.2 **Common Switching Optional Features** (Cont'd)

(F) Automatic Number Identification (ANI) (Cont'd)

The ten digit ANI telephone number is only available with Feature Group D, and where the technical capability exists, Feature Group B. The ten digit ANI telephone number consists of the Numbering Plan Area (NPA) plus the seven digit ANI telephone number. The ten digit ANI telephone number will be transmitted on all calls except those identified as ANI failure, in which case only the NPA will be transmitted (in addition to the information digit described (D) below).

For FGD where technical capabilities exist, ANI may be ordered on a class of service (type of call) basis, rather than the trunk group on which the call is routed. Class of service as defined here means: A) Service type; B) Line Class of Service (e.g., Hotel/Motel, Coin); C) Service Access Code (SAC) e.g., 500, Toll Free or 900); D) Prefix dialed (0+, 0-, 00-, 01+, 011+); or any combination of A through D.

Where ANI cannot be provided, information digits will be provided to the customer. (D)

The information digits identify: (1) telephone number is the station billing number - no special treatment required, (2) (D) ANI failure has occurred in the end office switch which prevents identification of calling telephone number - must be obtained by operator or in some other manner, (3) hotel/motel originated call which requires room number (T) identification,

ACCESS SERVICE

6. **Switched Access Service** (Cont'd)

6.3 **Optional Features** (Cont'd)

6.3.2 **Common Switching Optional Features** (Cont'd)

(F) Automatic Number Identification (ANI) (Cont'd)

(4) coinless station, hospital, inmate, etc. call which requires special screening or handling by the customer, and (5) (T) call is an Automatic Identified Outward Dialed (AIOD) call from customer premises equipment. The ANI telephone number is the listed telephone number of the customer and is not the telephone number of the calling party.

These ANI information digits are available with Feature Groups B and D.

Additional ANI information digits are available with Feature Group D only. They include:

(1) InterLATA restricted - telephone number is identified line

(2) InterLATA restricted - hotel/motel line

(3) InterLATA restricted - coinless, hospital, inmate, etc., line

These information digits will be transmitted as agreed to by the customer and the Telephone Company.

The ANI Arrangement is available with BSA-B and BSA-D as a chargeable BSE as specified in 6.2.14 and 6.5.15.

(G) Up to 7 Digit Outpulsing of Access Digits to Customer

This option provides for the end office capability of providing up to 7 digits of the uniform access code (950-XXXX) to the customer's premises. The customer can request that only some of the digits in the access code be forwarded. The access code digits would be provided to the customer's premises using multifrequency signaling, and transmission of the digits would precede the forwarding of ANI if that feature were provided. It is available with Feature Group B and BSA-B.

ACCESS SERVICE

6. **Switched Access Service** (Cont'd)

6.3 **Optional Features** (Cont'd)

6.3.2 **Common Switching Optional Features** (Cont'd)

(H) Revertive Pulse Address Signaling

This option provides for a dc pulsing arrangement that transmits intelligence in the following manner:

(1) The equipment at the originating location presets itself to represent the number of pulses required and to count the pulses received from the terminating location.

(2) The equipment at the terminating location transmits a series of pulses by the momentary grounding of its battery supply until the originating location breaks the dc path to indicate that the required number of pulses has been counted.

This option is available with Toll Free Access Service and 900 Access Service. (D)

(I) Delay Dial Start-Pulsing Signaling

This option provides a method of indicating to the near end trunk circuit readiness to accept address signaling information by the far end trunk circuit. Delay dial is often referred to as an off-hook interval and the start-pulsing signal is the on-hook interval. With integrity check, the calling office will not outpulse until a delay dial (off-hook) signal followed by a start-pulsing (on-hook) signal has been identified at the calling office. This option is available with Toll Free Access Service and 900 Access Service. (D)

(J) Immediate Dial Pulse Address Signaling

This option provides for the forwarding of dial pulses from the Telephone Company end office to the customer without the need of a start-pulsing signal from the customer. It is available with Toll Free Access Service and 900 Access Service. (D)

ACCESS SERVICE

6. **Switched Access Service** (Cont'd)

6.3 **Optional Features** (Cont'd)

6.3.2 **Common Switching Optional Features** (Cont'd)

(K) Dial Pulse Address Signaling

This trunk side option provides for the transmission of number information, e.g., called number, between the end office switching system and the customer's premises (in either direction) by means of direct current pulses. It is available with Toll Free Access Service and 900 Access Service.

(L) Panel Call Indicator Address Signaling

This option provides a dc pulsing arrangement in which each digit is transmitted as a series for four marginal and polarized impulses. It is available with Toll Free Access Service and 900 Access Service.

(M) Service Class Routing

This option provides the capability of directing originating traffic from an end office to a trunk group to a customer designated premises, based on the line class of service (e.g., coin or hotel/motel), service prefix indicator (e.g., 0-, (D) 0+, 01+ or 011+) or service access code (e.g., Toll Free or 900). When a customer orders service class routing, it must report the appropriate codes to be instituted in each end office or Telephone Company access tandem switch. Originating Toll Free-NXX-XXXX calls are routed in accordance with the Toll Free customer identification function described in 6.2.5(A)(1). It is provided in suitably equipped end office or Telephone Company access tandem switches and is available with FGD and BSA-D.

ACCESS SERVICE

6. **Switched Access Service** (Cont'd)

6.3 **Optional Features** (Cont'd)

6.3.2 **Common Switching Optional Features** (Cont'd)

(N) Alternate Traffic Routing

This option provides the capability of directing originating traffic from an end office (or appropriately equipped Telephone Company access tandem) to a trunk group (the "high usage" group) to a customer designated premises until that group is fully loaded, and then delivering additional originating traffic (the "overflowing" traffic) from the same end office or Telephone Company access tandem to a different trunk group (the "final" group) to a second customer designated premises. The customer shall specify the last trunk CCS desired for the high usage group. It is provided in suitably equipped end offices or Telephone Company access tandems and is available with Feature Group D, Toll Free Access Service, and 900 Access Service. (D)

This option is available with BSA-B and BSA-D as specified in 6.2.14 and 6.5.15. (D)

ACCESS SERVICE

6. **Switched Access Service** (Cont'd)

6.3 **Optional Features** (Cont'd)

6.3.2 **Common Switching Optional Features** (Cont'd)

(O) Trunk Access Limitation

This option provides for the routing of originating 900 service calls to a specified number of transmission paths in a trunk group, in order to limit (choke) the completion of such traffic to the customer. Calls to the designated service which could not be completed over the subset of transmission paths in the trunk group, i.e., the choked calls, would be routed to reorder tone. It is provided in all Telephone Company electronic end offices and where available in electromechanical end offices. The customer must specify the number of trunks to be instituted in each end office or Telephone Company access tandem switch for each arrangement ordered. It is available with FGD, BSA-D, and (D)
900 Access Service.

(P) Call Gapping Arrangement

This option, provided in suitably equipped end office switches, provides for the routing of originating calls to 900 service to be switched in the end office to all transmission paths in a trunk group at a prescribed rate of flow, e.g., one call every five seconds, in order to limit (choke) the completion of such traffic to the customer. Calls to the designated service which are denied access by this feature, i.e., the choked calls, would be routed to a no-circuit announcement. The customer must specify the trunk groups affected and prescribed rate of flow in each end office or Telephone Company access tandem switch for each arrangement ordered. It is provided in selected FGD and BSA-D equipped end offices and is available only with FGD, BSA-D and 900 Access Service.

(Q) International Carrier Option

This option allows for FGD and BSA-D end office(s) or Telephone Company access tandem(s) equipped for International Direct Distance Dialing to be arranged to forward the international calls of one or more international carriers to the customer (i.e., the Telephone Company is able to route originating international calls to a customer other than one designated by the end user either through presubscription or 101XXXX dialing). This arrangement requires provision of written verification to the Telephone Company that the customer is authorized to forward such calls.

ACCESS SERVICE

6. **Switched Access Service** (Cont'd)

6.3 **Optional Features** (Cont'd)

6.3.2 **Common Switching Optional Features** (Cont'd)

(Q) International Carrier Option (Cont'd)

The written verification must be in the form of a letter of agency authorizing the customer to order the option on behalf of the international carrier. This option is only provided at Telephone Company end offices or Telephone Company access tandems equipped for International Direct Distance Dialing. It is available with FGD and BSA-D.

(R) Non-Overlap Outpulsing

This option allows the customer to specify that all dialed digits must be received by the Telephone Company end office before any outpulsing takes place. After all dialed digits are received, the Telephone Company seizes a trunk toward the customer. This option is available with Feature Group D and BSA-D where technically feasible.

(S) Cut-Through

This option allows end users to reach the customer's premises by dialing 101XXXX + #. This option provides for connection of the call to the premises of the customer indicated by the 101XXXX code upon receipt of the end of dialing the # digit. The Telephone Company will not record any other dialed digits for these calls. This option is available with FGD and BSA-D where technically feasible.

ACCESS SERVICE

6. **Switched Access Service** (Cont'd)

6.3 **Optional Features** (Cont'd)

6.3.2 **Common Switching Optional Features** (Cont'd)

(T) Switched Access Interface# (T)

This arrangement provides the line switching and supervisory functions necessary to interface Voice Grade Special Access and Switched Access Services together for the provision of customer WATS and WATS-Type service. This service provides a transmission path capable of originating and/or terminating the customer's interstate and combined interstate/intrastate traffic. Combining of intrastate traffic will be provided in accordance with any individual state regulations as outlined in 6.3.2(T)(5).

This arrangement is only available from Telephone Company designated end offices which are identified as WATS Serving Offices (WSO) in NECA Tariff FCC No. 4. Technical limitations resident in certain end office switches may preclude the availability of certain Switched Access Interface features. Depending on the configuration selected below, the Telephone Company will provide such services from the closest WSO that is technically equipped to provide such services. Special Access Transport charges as described in 7.2.1(B) will be applicable to the WATS Serving Office appropriately equipped for the service feature requested.

The Switched Access portion of this arrangement is available from Section 6 of this tariff, except as set forth in (5) following, and provides connectivity from the Telephone Company's WATS Serving Office to the customer's premises. Subject to Section 1.1 preceding, the Special Access portion of this feature is available and provides (S)(x)
connectivity from the Telephone Company's WATS Serving Office to the customer's end user.

Switched Access Interface Arrangements are provided with rotary dial or dual tone multifrequency address signaling and either loop start or ground start supervisory signaling. The choice of signaling is at the option of the customer. Switched Access Interface Arrangements are also available with extensions, i.e., terminations of the service at different buildings within the same or different LATA. All applicable rates for interstate Special Access Service (S)(x)
provided by the Telephone Company apply to such extensions. (S)(x)

Switched Access Interface Service is available in the following configurations/features:

(x) Reissued material became effective December 17, 2019 under Transmittal No. 1400.

Service availability limited. Refer to # footnote on Page 21-13. (T)

ACCESS SERVICE

6. **Switched Access Service** (Cont'd)

6.3 **Optional Features** (Cont'd)

6.3.2 **Common Switching Optional Features** (Cont'd)

(T) Switched Access Interface# (Cont'd) (T)

(1) Originating Only Feature

The Originating Only feature is available from appropriately equipped WATS Serving Offices on a per line basis and provides for the transporting of interstate calls from a special access line to the customer via either FGA, FGB, FGD, BSA-A, BSA-B, or BSA-D Switched Access. It is provided in the following two arrangements:

(a) Restricted Geographic Screening Arrangement - Originating Only

This arrangement provides the ability to screen a dialed number by NPA and/or NXX on the basis of a geographical band which is in accordance with an end user's service agreement with the customer. The geographical bands available are those in effect as of the effective date of this tariff provision. The customer must provide the Telephone Company with the band information required for each Special Access line subscribed to this service.

This arrangement is provided when used exclusively for interstate traffic (excluding international). This arrangement is not available for multi-jurisdictional traffic (combined interstate and intrastate) as set forth in 6.3.2(T)(1)(b).

This arrangement is available from appropriately equipped WATS Serving Offices in conjunction with FGD and BSA-D and provides for:

- the transporting of all interstate 1+NPA/NXX-XXXX and 1+FNPA-555-1212 calls to Directory Numbers that are associated with a customer selected geographic band to the customer;

- the blocking of all 1+NPA-NXX-XXXX and 1+FNPA-NXX-XXXX calls directed to Directory Numbers that do not lie within the geographic band selected by the customer;

- the blocking of all 1+500-NXX-XXXX, 0+500-NXX-XXXX, 1+700-NXX-XXXX, 1+Toll Free-NXX-XXXX, and 1+900-NXX-XXXX calls;

- the blocking of all 0+NPA-NXX-XXXX calls;

Service availability limited. Refer to # footnote on Page 21-13. (T)

ACCESS SERVICE

6. **Switched Access Service** (Cont'd)

6.3 **Optional Features** (Cont'd)

6.3.2 **Common Switching Optional Features** (Cont'd)

(T) Switched Access Interface# (Cont'd) (T)

(1) Originating Only Feature (Cont'd)

(a) Restricted Geographic Screening Arrangement - Originating Only (Cont'd)

- the transporting of all calls originated by dialing 0 (zero) to the Telephone Company operator;
- the transporting of all calls originated by dialing 00 (Zero, Zero) to the IC customer (available only with FGD and BSA-D);
- the blocking of all international calls preceded by the access codes 01 and 011; and
- the blocking of all calls preceded by the access code 101XXXX

(b) Unrestricted Arrangement - Originating Only

This arrangement is a multi-jurisdictional offering provided from a Telephone Company appropriately equipped WATS Serving Office and provides for the transporting of interstate and intrastate calls from a Special Access Line to the customer via FGA, FGB, FGD, BSA-A, BSA-B, and/or BSA-D Switched Access. FGA or BSA-A access is obtained from a WATS Serving Office by dialing a standard seven-digit number. FGB or BSA-B access is obtained from a WATS Serving Office by dialing 950-XXXX or 1+950-XXXX. The combining of interstate and intrastate traffic will be in accordance with 6.3.2(T)(5). This arrangement provides for transporting the following types of calls:

- 1+NPA-NXX-XXXX, 1+700-NXX-XXXX, and 1+FNPA-555-1212 calls to the IC customer or via facilities of the Telephone Company where state restrictions exist as detailed in 6.3.2(T)(5).
- 1+Toll Free-NXX-XXXX calls to the carrier in accordance with the Toll Free customer identification function described in 6.2.5(A)(1);
- 1+900-NXX-XXXX calls to the carrier in accordance with the 900 customer identification function described in 6.2.6(A)(1).
- 1+500-NXX-XXXX, 0+500-NXX-XXXX calls to the carrier in accordance with the 500 customer identification function described in 6.2.8(A)(1).

Service availability limited. Refer to # footnote on Page 21-13. (T)

ACCESS SERVICE

6. **Switched Access Service** (Cont'd)

6.3 **Optional Features** (Cont'd)

6.3.2 **Common Switching Optional Features** (Cont'd)

(T) Switched Access Interface# (Cont'd) (T)

(1) Originating Only Feature (Cont'd)

(b) Unrestricted Arrangement - Originating Only (Cont'd)

- 0+NPA-NXX-XXXX calls to the IC customer or via facilities of the Telephone Company where state restrictions exist as detailed in 6.3.2(T)(5) following;
- calls originated by dialing 0 (zero) to the Telephone Company operator;
- calls originated by dialing 00 (Zero, Zero) to the IC customer (available only with FGD and BSA-D);
- calls originated by dialing 01 or 011 to the IC customer; and
- 1+ or 0 (zero)+ NPA-NXX-XXXX calls preceded by the access code 101XXXX to the carrier designated by the dialed digits (available only with FGD and BSA-D).

Optional Access Code Arrangements

Subject to technical availability, on an individual line basis, calls preceded by the access code 101XXXX will be blocked.

Service availability limited. Refer to # footnote on Page 21-13. (T)

ACCESS SERVICE

6. **Switched Access Service** (Cont'd)

6.3 **Optional Features** (Cont'd)

6.3.2 **Common Switching Optional Features** (Cont'd)

(T) Switched Access Interface# (Cont'd) (T)

(2) Toll Free Type Terminating Only Feature

The Toll Free Type Terminating Only feature is available on a per-line basis from appropriately equipped WATS Serving Offices and provides for the termination of all calls from the subscribing carrier (originated on a 1+Toll Free basis) directed to the Special Access via FGA, FGB, FGD, BSA-A, BSA-B and BSA-D Switched Access. This optional feature is not available with Tandem Switch Signaling.

(3) Combined Originating Toll Free Type Terminating Calling Feature

The Combined Originating/Terminating Calling feature is available on a per-line basis from appropriately equipped WATS Serving Offices and provides the functionalities of both the Originating Only and the Toll Free Type Terminating Only features. This optional feature is not available with Tandem Switch Signaling.

Service availability limited. Refer to # footnote on Page 21-13. (T)

6. **Switched Access Service** (Cont'd)

6.3 **Optional Features** (Cont'd)

6.3.2 **Common Switching Optional Features** (Cont'd)

(T) Switched Access Interface# (Cont'd) (T)

(4) The following matrix details the direction, call type, service prefix and traffic types provided on each Switched Access Interface Arrangement.

	Switched Access Interface Arrangements			
			Combined	
	Restricted Geographic Screening Arrangement	Unrestricted	Toll Free Type Terminating Only	Originating/ Toll Free Type Terminating
Section Ref.	(T)(1)(a)	(T)(1)(b)	(T)(2)	(T)(3)
Directionality				
Originating Only	x	x		
Terminating Only			x	
Two-Way				x
Call Type (1+)				
Local	B	B	B	B
IntraLATA/Intrast.	B	R/D*	C	R/D/C*
IntraLATA/Interst.	D	D	C	D/C
InterLATA/Intrast.	B	D*	C	D/C*
InterLATA/Interst.	D	D	C	D/C
Service Prefix				
0-	R	R		R
00-	D	D		D
0+	B	D*		D*
IDDD	B	D		D
101XXXX	B	D/B*		D/B*
Traffic Type				
411	B	B		B
911	R	R		R
976	R	R		R
700	B	D		D
500/Toll Free/900	B	D		D

D = Telephone Company DELIVERS traffic to the customer.
R = Telephone Company RETAINS and completes traffic.
C = Telephone Company COMPLETES traffic to the end user's premises.
B = Telephone Company BLOCKS traffic to an announcement.

*Intrastate traffic will be delivered to the customer except where a state restriction on the passage of intraLATA and/or interLATA traffic exists. These restrictions are detailed in 6.3.2(T)(5).

Service availability limited. Refer to # footnote on Page 21-13. (T)

(This page filed under Transmittal No. 1402.)

ACCESS SERVICE

6. **Switched Access Service** (Cont'd)

6.3 **Optional Features** (Cont'd)

6.3.2 **Common Switching Optional Features** (Cont'd)

(T) Switched Access Interface# (Cont'd) (T)

(5) Intrastate Traffic Restriction

An interstate Switched Access Interface and an intrastate Switched Access Interface must be ordered for the provisioning of multi-jurisdictional access.

Unless the customer subscribes to the 101XXXX blocking option offered in Section 6.3.2(T)(1)(b)i preceding, all calls carried over a Special Access Line used in conjunction with a Switched Access Interface for multi-jurisdictional access will be passed to the customer for completion except where a state restriction exists as follows.

State restrictions on the passage of intraLATA intrastate traffic exist in the following states:

Virginia

The state restrictions are described as follows:

Service availability limited. Refer to # footnote on Page 21-13. (T)

ACCESS SERVICE

6. **Switched Access Service** (Cont'd)

6.3 **Optional Features** (Cont'd)

6.3.2 **Common Switching Optional Features** (Cont'd)

(T) Switched Access Interface# (Cont'd) (T)

(5) Intrastate Traffic Restriction (Cont'd)

(a) **Virginia**

In accordance with the State Corporation Commission of the Commonwealth of Virginia's Order issued July 24, 1995 in Case No. PUC 850035, all intrastate intraLATA 1+ communications are to be completed by the Telephone Company. Customer dialed 101XXXX communications will be passed to the authorized carrier specified by the dialed access code.

Service availability limited. Refer to # footnote on Page 21-13. (T)

ACCESS SERVICE

6. **Switched Access Service** (Cont'd)

6.3 **Optional Features** (Cont'd)

6.3.2 **Common Switching Optional Features** (Cont'd)

(T) Switched Access Interface# (Cont'd) (T)

(5) Intrastate Traffic Restriction (Cont'd)

The terms, conditions, and rates for the interstate Switched Access and Special Access associated with this feature are as set forth in Sections 6 and 7 of this tariff. The terms, conditions, and rates for the intrastate access services are as set forth in the Telephone Company Intrastate Access tariffs.

When the customer orders interstate Special Access from the Telephone Company for the facilities between the end user's premises and the WATS Serving Office for use with Multi-jurisdictional Access as set forth above, and if the Telephone Company intrastate tariff also provides for customer billing for these facilities, the customer will be exempted from the intrastate charge. (S)(x)

(x) Reissued material became effective December 17, 2019 under Transmittal No. 1400.

Service availability limited. Refer to # footnote on Page 21-13. (T)

ACCESS SERVICE

6. **Switched Access Service** (Cont'd)

6.3 **Optional Features** (Cont'd)

6.3.2 **Common Switching Optional Features** (Cont'd)

(U) **Switched Data Service**

(1) Switched 56

Switched Data service provides for a connection capable of up to 56 Kbps digital transmission between a customer's premises and a suitably equipped end office. Switched Data service lines connected at those suitably equipped end offices may be accessed on a switched basis for digital transmission up to 56 Kbps. These locations are identified in the National Exchange Carrier Association, Inc., Tariff F.C.C. No. 4 Wire Center and Interconnection Information. Access is made via the standard FGD or BSA-D dialing pattern as described in Section 6.2.4(A)(6).

This option is available only with FGD and BSA-D. A separate FGD or BSA-D trunk must be established for the provision of Switched Data service. This trunk group requires the use of a DS1 digital interface (Interface Group 6) as described in Section 9.1.6. Switched Data and Non-switched Data traffic may not be combined on the same trunk group.

(2) Switched 64

This option provides for a connection capable of up to 64 Kbps digital transmission with clear channel capability between the customer's CDL and a suitably equipped end office. Clear channel capability allows for full bandwidth availability to the customer with no part of the channel used for control, framing or signaling.

Switched 64 requires all digital facilities including the use of a DS1 digital interface as described in Section 9.1.6 and is available only with FGD and BSA-D from end offices capable of providing SS7 signaling, Bipolar with Eight Zero Substitution (B8ZS) line code format and Integrated Services Digital Network (ISDN) or other Switched Data based services. These locations are identified in the National Exchange Carrier Association, Inc., Tariff F.C.C. No. 4 Wire Center and Interconnection Information.

6. **Switched Access Service** (Cont'd)

6.3 **Optional Features** (Cont'd)

6.3.2 **Common Switching Optional Features** (Cont'd)

(U) **Switched Data Service**

(2) (Cont'd)

Access is made via the standard dialing pattern as set forth in Section 6.2.4(A)(G).

A separate FGD or BSA-D trunk group must be established for the provision of Switched 64 service.

Switched data and non-switched data traffic may not be combined on the same trunk group.

(V) Band Advance Arrangement

This option, which is provided in association with two or more Switched Access Interface groups, provides for the automatic overflow of terminating calls to a Switched Access Interface group, when that group has exceeded its call capacity, to another Switched Access Interface group with a band designation equal to or greater than that of the overflowing Switched Access Interface group. This arrangement does not provide for call overflow from a group with a higher band designation to one with a lower one.

(W) Signaling System 7 (SS7) Out of Band Signaling

This option is provided in conjunction with Common Channel Signaling System 7 (CCS7) Access Service described in Section 6.2.7 and is only available with FGD, BSA-D, 500, Toll Free or 900 Access service. SS7 Out of Band Signaling provides common channel out of band transmission of address and supervisory SS7 protocol signaling information between the end office or Telephone Company access tandem switching systems and the customer's premises. FGD and BSA-D Switched Access, 500 Toll Free and 900 Access service equipped with SS7 Out of Band Signaling (Tandem Switch Signaling is only available with FGD, BSA-D, 500 and 900 Services) are available with Interface Groups 6 (DS1), and 9 (DS3). SS7 Out of Band Signaling is provided at suitably equipped Telephone (C)
Company end office or Telephone Company access tandem. The technical specifications for SS7 Out of Band Signaling are described in Technical Reference GR- 905-CORE, Issue 11.

ACCESS SERVICE

6. **Switched Access Service** (Cont'd)

6.3 **Optional Features** (Cont'd)

6.3.2 **Common Switching Optional Features** (Cont'd)

(X) Calling Party Number (CPN) Parameter

The CPN parameter, available as a nonchargeable option for originating FGD or BSA-D with SS7 Out of Band Signaling, provides for the automatic transmission of the ten digit directory number, associated with a calling station, to the customer's premises for originating calls. The ten digit number consists of the NPA plus the seven digit telephone number which may or may not be the same number as the calling station's charge number. The CPN parameter also includes a "privacy indicator" which allows the ten digit telephone number to be coded as presented or restricted for delivery to the called end user. The technical specifications for CPN are described in Technical Reference GR-905-CORE, Issue 11. (T) (C)(x)

(Y) Carrier Selection Parameter (CSP)

The CSP parameter, available as a nonchargeable option for originating FGD or BSA-D with SS7 Out of Band Signaling, provides for the automatic transmission of a signaling indicator which signifies to the customer whether or not a given call originated from a presubscribed line. If the line was presubscribed, the indicator will signify if the end user did or did not dial 101XXXX. The technical specifications for CSP are described in Technical Reference GR-905-CORE, Issue 11. (C)(x) (C)(x)

(Z) Charge Number (CN) Parameter

The CN parameter, available as a nonchargeable option for originating FGD with SS7 Out of Band Signaling, is equivalent to the existing ten digit Automatic Number Identification (ANI) available with FGD with MF signaling. When BSA-D with SS7 Out of Band Signaling is specified, the customer may order the CN parameter at the rates for ANI-BSE as shown in 6.6. The CN parameter provides for the automatic transmission of the ten digit billing number of the calling station and the originating line information. The technical specifications for CN are described in Technical Reference GR-905-CORE, Issue 11. (C)(x)

(x) GR-905-CORE, Issue 11, replaces TR-TSV-000905 in its entirety.

ACCESS SERVICE

6. **Switched Access Service** (Cont'd)

6.3 **Optional Features** (Cont'd)

6.3.2 **Common Switching Optional Features** (Cont'd)

(Z) Charge Number (CN) Parameter (Cont'd)

These information digits shall only be used for billing and collection, routing, screening, and completion of the originating subscriber's call or transaction or for service directly related to the originating subscriber's call or transaction.

The information provided shall not be reused or resold without first notifying the originating telephone subscriber and obtaining affirmative consent of the subscriber for reuse or resale.

Unless the originating subscriber has given consent for the reuse or resale, any information provided shall not be used for any purpose other than:

- performing the services or transactions that are subject of the originating subscriber's call;
- ensuring network performance security, and the effectiveness of call delivery;
- compiling, using and disclosing aggregate information, and,
- complying with applicable laws.

The above restrictions shall not prevent the subscriber to the CN Parameter from using information acquired from a CN Parameter, such as the telephone number or information derived from analysis of the characteristics of calls received through the CN Parameter, to offer a product or service that is directly related to the products or services previously purchased by a customer of the CN Parameter subscriber.

ACCESS SERVICE

6. **Switched Access Service** (Cont'd)

6.3 **Optional Features** (Cont'd)

6.3.2 **Common Switching Optional Features** (Cont'd)

(AA) Tandem Switch Signaling

This option allows for the passing of the Carrier Identification Code (CIC) and the OZZ code or circuit code information needed to perform tandem switching functions. The CIC identifies the uniform access code associated with the Switched Access usage for a specific interexchange carrier. The OZZ code identifies the service class routing code of a multifrequency call that indicates the interexchange carrier's trunk group to which the traffic will be routed. The circuit code identifies the service class routing of a SS7 call that indicates the interexchange carrier's trunk group to which the traffic will be routed (e.g., 0+, 0-, 500, 900, etc). This option is only available with FGD and BSA-D Switched Access, 500 SAC Access Service and 900 SAC Access service. This option is not available from (D)
Telephone Company access tandems. (D)

(AB) FGD and BSA-D Switched Access with 950-XXXX Access

FGD and BSA-D Switched Access with 950-XXXX Access is an optional arrangement that provides for the routing of (T)
originating calls using a customer's 950-XXXX access code to the customer over the customer's FGD or BSA-D trunks. All such calls will be rated as FGD or BSA-D switched access calls.

This optional arrangement, available where technically feasible, uses FGD or BSA-D signaling protocols and (D)
technical specifications. The 950-XXXX traffic can be routed over FGD or BSA-D trunks combined with the customer's standard FGD or BSA-D traffic directly to the CDL or through a Telephone Company access tandem to the CDL. The customer must be able to differentiate standard FGD or BSA-D calls from 950-XXXX calls delivered over the same FGD or BSA-D trunks. FGD or BSA-D Switched Access with 950-XXXX Access is not available with certain Telephone Company Access tandem switches when the signaling from an end office to the Telephone Company Access tandem is multifrequency address signaling and the signaling from the Telephone Company Access tandem to the CDL is SS7 Out of Band signaling. The customer may not have originating FGD or BSA-D switched access with 950-XXXX access and originating FGB or BSA-B switched access in the same end office utilizing the same 950-XXXX Customer Identification Code.

ACCESS SERVICE

6. **Switched Access Service** (Cont'd)

6.3 **Optional Features** (Cont'd)

6.3.2 **Common Switching Optional Features** (Cont'd)

(AC) Carrier Identification Parameter (CIP)

Carrier Identification Parameter is available as an optional feature provided in conjunction with originating FGD with SS7 Out of Band Signaling. CIP provides for the transmission of the Carrier Identification Code (CIC) or the access code 101XXXX to the customer with the Initial Address Message (IAM). CIP is available with originating FGD in suitably equipped end offices and access tandems. CIP will be populated by a 4-digit CIC at the rates shown in 6.6.15. Application of charges is shown in 6.5.16.

The Telephone Company will make every effort to maintain CIP information, equipment and facilities in a format which facilitates the customer's use of the CIP offering. Changes (i.e., technology, customer account makeup, etc.) can occur affecting such information, however, and the Telephone Company cannot guarantee that the CIP equipment and facilities will be completely capable of processing CIP data at all times. Accordingly, the Telephone Company shall not be liable for any incidental, indirect, special or consequential damages (including lost revenue or profits) of any kind, resulting from inaccuracy of CIP data and/or the inability of its equipment and facilities to process CIP data.

(AD) Flexible Automatic Number Identification (FLEX ANI)

FLEX ANI, available as a nonchargeable option, when ordered in conjunction with the ANI optional feature or the ANI BSE, provides additional values for the ANI Information Indicator (II) digits to identify calls originating from public telephone access service lines for per call compensation. The FLEX ANI option is provided per end office on a Carrier Identification Code (CIC) basis and is available with FGD service or BSA D service at suitably equipped end offices.

ACCESS SERVICE

6. **Switched Access Service** (Cont'd)

6.3 **Optional Features** (Cont'd)

6.3.3 **Transport Termination Optional Features**

(A) Rotary Dial Station Signaling

This option provides for the transmission of called party address signaling from rotary dial stations to the customer's premises for originating calls. This option is provided in the form of a specific type of Transport Termination. It is available with FGB and BSA-B only on a directly trunked basis.

(B) Reserved for Future Use (C)

(D)

(D)

ACCESS SERVICE

6. **Switched Access Service** (Cont'd)

6.3 **Optional Features** (Cont'd)

6.3.3 **Transport Termination Optional Features** (Cont'd)

(D)

(D)

ACCESS SERVICE

6. **Switched Access Service** (Cont'd)

6.3 **Optional Features** (Cont'd)

6.3.3 **Transport Termination Optional Features** (Cont'd)

(D)

(D)

(C) Operator Trunk - Full Feature

This option provides the initial coin return control function to the customer's operator. It is available with FGD and BSA-D and is provided as a trunk type for Transport Termination. This option is not available in conjunction with SS7 Out of Band Signaling.

ACCESS SERVICE

6. **Access Service** (Cont'd)

6.4 **Provision of Switched Access Service**

In addition to the obligations of the Telephone Company set forth in 2. preceding, the Telephone Company has certain other obligations pertaining only to the provision of Switched Access Service. These obligations are as follows:

(A) Network Management

The Telephone Company will administer its network to insure the provision of acceptable service levels to all telecommunications users of the Telephone Company's network services. Generally, service levels are considered acceptable only when both end users and customers are able to establish connection with little or no delay encountered within the Telephone Company network.

The Telephone Company maintains the right to apply protective controls, (i.e., those actions which selectively cancel the completion of traffic) over any traffic carrier over its network, including that associated with a customer's Switched Access Service. Generally, such protective measures would only be taken as a result of occurrences such as failure or overload of Telephone Company or customer facilities, natural disasters, mass calling or national security demands. In the event that the protective controls applied by the Telephone Company result in the complete loss of service by the customer, the customer will be granted a Credit Allowance for Service Interruption as set forth in 2.7.1.1 preceding. (T)

(B) Design and Traffic Routing of Switched Access Service

The Telephone Company shall work cooperatively with the customer to design and determine the routing and directionality of Switched Access including the selection of facilities from the first point of switching to the customer's premises. Selection of facilities, equipment and routing of the Switched Access is based on standard engineering methods, facilities and equipment available, Telephone Company traffic routing plans, and the customer's order for service.

ACCESS SERVICE

6. **Switched Access Service** (Cont'd)

6.4 **Provision of Switched Access Service** (Cont'd)

(B) Design and Traffic Routing of Switched Access Service (Cont'd)

(D)
(D)
(D)
(D)
(D)

Any customer may request that the facilities used to provide Switched Access Service be specially routed. The regulations, rates and charges for Special Facilities Routing (i.e., Avoidance, Diversity, and Cable-Only) are set forth in 11.

(C) Access Tandem Arrangements

Trunk side switched access services may be provided via a Telephone Company access tandem to specific end offices subtending that Telephone Company access tandem. Each subtending end office will be located within the Telephone Company Access Tandem Network as defined by the Telephone Company. Telephone Company access tandem offices are identified in the National Exchange Carrier Association Tariff FCC No. 4. The Telephone Company will provide the description of a Telephone Company Access Tandem Network to a customer upon request. When trunk side access is ordered to a specific Telephone Company access tandem, access will be provided to all the NXXs included in that Telephone Company Access Tandem Network.

ACCESS SERVICE

6. **Switched Access Service** (Cont'd)

6.4 **Provision of Switched Access Service** (Cont'd)

(D) Determination of Number of Transmission Paths and Terminations

For Switched Access Service arrangements the customer must specify the number and type of Entrance Facilities between the customer designated premises and the serving wire center in the order for service.

The Telephone Company will determine the number of Switched Access Service transmission paths to be provided for Tandem-Switched Transport Services, when ordered in busy hour minutes of capacity. A transmission path is a communication path within the frequency bandwidth of approximately 300 to 3000 Hz or a derived communication path of frequency bandwidth of approximately 300 Hz to 3000 Hz provided over a high frequency analog facility or a high speed digital facility between a customer's premises and a Telephone Company location.

The number of transmission paths will be developed using the total busy hour minutes of capacity by type [as described in 5.1.2 (A)(2)] for the end offices for each Switched Access Arrangement ordered from a customer's premises. The total busy hour minutes of capacity by type for the end office will be converted to transmission paths using standard Telephone Company traffic engineering methods. The number of transmission paths provided shall be the number required based on (1) the use of Telephone Company access tandems and end offices (2) the use of end offices only, or (3) the use of Telephone Company access tandems only.

For analog entry switches, a termination will be provided for each transmission path provided. For digital entry switches, an equivalent termination will be provided for each transmission path provided.

(E) Transmission Specifications

Each Switched Access Service transmission path is provided with standard transmission specifications. There are three different standard specifications (Types A, B and C). The standard for a particular transmission path is dependent on the Switched Access Service, the Interface Group and whether the service is directly routed or via a Telephone Company access tandem.

ACCESS SERVICE

6. **Switched Access Service** (Cont'd)

6.4 **Provision of Switched Access Service** (Cont'd)

(E) Transmission Specifications (Cont'd)

The available transmission specifications are set forth in 9 following. Data Transmission Parameters are also provided with each Switched Access Service transmission path. The Telephone Company will, upon notification by the customer that the data parameters are not being met, conduct test independently or in cooperation with the customer, and take any necessary action to insure that the data parameters are met. The transmission performance parameters relate only to the Telephone Company provided portion of the service.

The transmission specifications and diversity requirements for CCS7 Access Service are as described in Technical Reference GR-905-CORE, Issue 11.

(F) Design Layout Report

At the request of the customer, the Telephone Company will provide to the customer the makeup of the facilities and services provided from the customer's premises to the first point of switching. This information will be provided in the form of a Design Layout Report. The Design Layout Reports will be provided to the customer at no charge, and will be reissued or updated whenever these facilities are materially changed.

(G) Testing

(1) Acceptance Testing

Prior to the customer's acceptance of Switched Access Service, and at the Customer's request, the Telephone Company will cooperatively test the following parameters as set forth in (a) and (b). Also, when a customer provides a digital to analog conversion in the provision of a Switched Access Service, the customer has the ability to specify either the digital or analog acceptance tests as described in (a) or (b) to be performed by the Telephone Company. In addition to the various tests outlined below which will be included with the installation of service, other additional Cooperative Acceptance Testing and Nonscheduled Testing is available for Switched Access Service as detailed in 8.

(a) When a customer orders FGB, FGD, BSA-B, BSA-D, 500 Access Service, Toll Free Access Service, or 900 Access Service and the Telephone Company provides a digital transmission facility between the Telephone Company serving wire center and the customers designated premise without a digital to analog conversion; the digital acceptance tests performed by the Telephone Company will consist of the following: (C)

ACCESS SERVICE

6. **Switched Access Service** (Cont'd)

6.4 **Provision of Switched Access Service** (Cont'd)

(G) Testing (Cont'd)

(1) Acceptance Testing (Cont'd)

(a) (Cont'd)

- Bit Error test in each transmission direction
- 1004 Hz test per trunk group per di-group in each transmission direction
- C-notched noise test per trunk group per di-group in each transmission direction
- One operational signaling test per trunk in each transmission direction
- Bit Error test in each transmission direction
- 1004 Hz test per trunk group per di-group in each transmission direction
- C-notched noise test per trunk group per di-group in each transmission direction
- One operational signaling test per trunk in each transmission direction.

If a Telephone Company digital facility is provided in conjunction with a High Capacity Special Access Service, the Telephone Company will furnish, upon the customer's request and where the central office is technically equipped, appropriate equipment to allow the customer to conduct tests to verify the integrity of the facility in lieu of cooperative acceptance testing.

(b) When a customer orders FGB, FGD, BSA-B, BSA-D, Toll Free Switched Access Service, and the Telephone Company provides analog transmission facilities between the Telephone Company serving wire center and the customer's designated premise, the analog tests performed by the Telephone Company consist of the following: (D)

- Attenuation tests
- Balance tests (ERL-SRL)
- C-Message noise test
- C-notched noise
- 3 tone slope
- DC continuity
- Operational Signaling

ACCESS SERVICE

6. **Switched Access Service** (Cont'd)

6.4 **Provision of Switched Access Service** (Cont'd)

(G) Testing (Cont'd)

(1) Acceptance Testing (Cont'd)

(c) When 500, Toll Free, or 900 NXXs are activated (new translations installed) by the Telephone Company, NXX code (T) testing will be performed by the Telephone Company. For each new NXX activated in a Telephone Company switch capable of performing the customer identification function for 500, Toll Free, or 900 Access Service, the Telephone (T) Company shall place one test call to the IC's 500, Toll Free, or 900-NXX-XXXX test number. This number provides (T) an announcement identifying the IC, thereby verifying Telephone Company routing.

(2) In-Service Testing

After a Switched Access Service has been tested and accepted by the customer for service, the Telephone Company may perform various tests to ensure the quality of the Switched Access Service. These tests may be performed on a routine basis at the discretion of the Telephone Company, and are made subject to the availability of qualified personnel and test equipment. No charge will be assessed to the customer for the provision of In-Service tests.

The Telephone Company may at its option provide the following types of In-Service Switched Access Service tests:

- Attenuation and noise tests
- Balance tests
- Gain - slope tests

When the Telephone Company and the customer agree to test cooperatively, the Telephone Company shall provide the personnel and test equipment necessary to perform such tests at a mutually agreed upon time. The customer may request the Telephone Company to provide a technician at the customer's premises in order to perform these cooperatively scheduled tests. Rates and charges as set forth in 8.4 will apply per technician provided.

ACCESS SERVICE

6. **Switched Access Service** (Cont'd)

6.4 **Provision of Switched Access Service** (Cont'd)

(G) Testing (Cont'd)

(3) Testing Capabilities

FGA, FGB, FGD, BSA-A, BSA-B, and BSA-D are provided, in the terminating direction where equipment is available, with Seven Digit Access to balance (100 type), and milliwatt (102 type) testlines. (D)

Additionally, FGB, FGD, BSA-B, and BSA-D are provided, in the terminating direction where equipment is available, with seven digit access to the following test lines: (D)

- Nonsynchronous or synchronous test lines
- Automatic transmission measuring (105 type) test line
- Data transmission (107 type) test line
- Loop around test line
- Short circuit and open circuit test line

(4) SS7 Out of Band Signaling

When FGD, BSA-D, 500, Toll Free, or 900 Access Service with SS7 Out of Band Signaling is ordered, network compatibility and other operational tests will be performed cooperatively by the Telephone Company and the customer at locations, dates, and times as specified by the Telephone Company in consultation with the customer. These tests are as specified in Technical Reference GR-905-CORE, Issue 11. Successful completion is necessary to receive the SS7 signaling option. To protect the security of the SS7 network, certain of the information provided, i.e., point codes, by the Telephone Company to the customer will be subject to a nondisclosure agreement.

ACCESS SERVICE

6. **Switched Access Service** (Cont'd)

6.4 **Provision of Switched Access Service** (Cont'd)

(H) Trunk Group Measurement Reports

Subject to availability, the Telephone Company will make available trunk group data in the form of usage in CCS, peg count and overflow, to the customer based on previously agreed to intervals.

With the agreement of the customer, trunk group data in the form of usage in CCS, peg count and overflow for its end of all access trunk groups, where technologically feasible, will be made available to the Telephone Company. These data will be used to monitor trunk group utilization and service performance and will be based on previously arranged intervals and format.

(I) Service Performance Data

Subject to availability, end-to-end service performance data available to the Telephone Company through its own service evaluation routines, may also be made available to the customer based on previously arranged intervals and format. These data provide information on overall end-to-end call completion and non-completion performance, e.g., customer equipment blockage, failure results and transmission performance. These data do not include service performance data which are provided under other tariff sections; e.g., testing service results. If data are to be provided in other than paper format, the charges for such exchange will be determined on an individual case basis. Performance data related to customer provided facilities will not be provided.

(J) Reserved for Future Use (C)

(D)
|
|
|
|
|
(D)

ACCESS SERVICE

6. **Switched Access Service** (Cont'd)

6.4 **Provision of Switched Access Service** (Cont'd)

(D)
|
|
|
|
|
|
|
(D)

(K) Design Blocking Probability

The Telephone Company will design the facilities used in the provision of Switched Access Service to meet the blocking probability criteria as set forth as follows:

For FGA, FGB, BSA-A and BSA-B no design blocking criteria apply.

(D)
|
|
(D)

For FGD and BSA-D, the design blocking objective will be no greater than one percent (.01) between the point of termination at the customer's premises and the end office, whether the traffic is directly routed without an alternate route or routed via a Telephone Company access tandem. Standard traffic engineering methods as set forth in Technical Reference ST-TEC-000053, Issue 1 (Telecommunications Transmission Engineering - Volume 3 - Networks and Services (Chapters 6 and 7)) will be used by the Telephone Company to determine the number of transmission paths required to achieve this level of blocking.

6. **Switched Access Service** (Cont'd)

6.4 **Provision of Switched Access Service** (Cont'd)

(K) Design Blocking Probability (Cont'd)

For Toll Free Access Service provided via 500 Access Service trunk(s), Toll Free Access Service trunk(s), or 900 Access Service provided via 900 Access Service trunk(s) the design blocking objective will be no greater than one percent (.01) between the point of termination at the customer's premises and the first point of switching when traffic is directly routed without an alternate route. Standard traffic engineering methods will be used by the Telephone Company to determine the number of transmission paths required to achieve this level of blocking. During mass calling events, the blocking objective of no greater than one percent (.01) can not be guaranteed. (T)

The Telephone Company will perform routine measurement functions except on FGA, FGB, BSA-A and BSA-B, to assure that an adequate number of transmission paths are in service. The Telephone Company will recommend that additional capacity (i.e., busy hour minutes of capacity or trunks) be ordered by the customer when additional paths are required to reduce the measured blocking to the designed blocking level. For the capacity ordered, the design blocking objective is assumed to have been met if the routine measurements show that the measured blocking does not exceed the threshold listed in the following tables.

(1) For transmission paths carrying only first routed traffic direct between an end office and customer's premises without an alternate route, and for paths carrying only overflow traffic, the measured blocking thresholds are as follows:

Number of Transmission Paths Per Trunk Group	Measured Blocking Thresholds in the Time Consistent Busy Hour for the Number of Measurements Taken Between 8:00 a.m. and 11:00 p.m. Per Trunk Group			
	15-20 Measurements	11-14 Measurements	7-10 Measurements	3-6 Measurements
2	.070	.080	.090	.140
3	.050	.060	.070	.090
4	.050	.060	.070	.080
5-6	.040	.050	.060	.070
7 or more	.030	.035	.040	.060

ACCESS SERVICE

6. **Switched Access Service** (Cont'd)

6.4 **Provision of Switched Access Service** (Cont'd)

(K) Design Blocking Probability (Cont'd)

(2) For transmission paths carrying first routed traffic between an end office and customer's premises via a Telephone Company access tandem, the measured blocking thresholds are as follows:

Number of Transmission Paths Per Trunk Group	Measured Blocking Thresholds in the Time Consistent Busy Hour for the Number of Measurements Taken Between 8:00 a.m. and 11:00 p.m. Per Trunk Group			
	15-20 Measurements	11-14 Measurements	7-10 Measurements	3-6 Measurements
2	.070	.080	.090	.140
3	.050	.060	.070	.090
4	.050	.060	.070	.080
5-6	.040	.050	.060	.070
7 or more	.030	.035	.040	.060

6. **Switched Access Service** (Cont'd)

6.5 **Rate Categories, Applications, and Regulations**

6.5.1 **Rate Categories**

Switched Access Service is composed of four general Rate Categories which are combined to form the foundation for measuring and rating such services. Each Rate Category is composed of certain specific rate elements which may apply to each Switched Access Service. The specific rate elements which comprise each Rate Category are as follows.

Local Transport (Described in 6.5.2 following)

- Entrance Facility
- Direct-Trunked Transport
- Tandem-Switched Transport (D)
- Interconnection Rate
- Multiplexing
- Dedicated Trunk Port
- Shared Multiplexing

End Office (Described in 6.5.3 following)

- Local Switching
- Information Surcharge
- Toll Free Data Base Query Service
- Shared Trunk Port

Carrier Common Line (Described in Section 3 preceding)

- Originating Element
- Terminating Element

Nonrecurring Charge (Described in 6.5.4 following).

CCS7 Access Service (Described in 6.5.12 following)

- Dedicated Switched Access Line
- Dedicated Switched Access Transport
- STP Port Termination
- SS7 Transport

Switched Access Cross Connect (Described in 6.5.13 following)

Local Transport, End Office and Carrier Common Line Charges are usage based rates applied on a per access minute basis as set forth in 6.5.6 following. Access minute charges are accumulated over a monthly period. The determination of access minutes is set forth in 6.5.5 following. Toll Free Data Base Query charges are applied on a per query basis either as basic or premium as described in 6.5.3(C).

(D)
(D)

ACCESS SERVICE

6. **Switched Access Service** (Cont'd)

6.5 **Rate Categories, Applications, and Regulations** (Cont'd)

6.5.2 **Local Transport**

(A) Local Transport Description

Local Transport provides the transmission of Switched Access communications between the customer's premises and the originating or terminating end office(s) in the Access Area with one exception. Local Transport associated with FGA or BSA-A 1+ terminating traffic provides for the transmission of Switched Access outside the Access Area, however within the LATA. Local Transport is comprised of the following rate elements; an Entrance Facility Rate, a Direct-Trunked Transport Rate, a Tandem-Switched Transport Rate, an Interconnection Rate, a Dedicated Trunk Port Rate, and a Shared Multiplexing Rate. A Dedicated Switched Access Transport Rate is associated with CCS7 Access Service. An EIS Cross Connect rate applies where Switched Access is interconnected with customer transmission facilities in accordance with Section 17. (D)

Where Local Transport rates are applied on a distance sensitive basis, airline mileage is calculated in accordance with the V&H coordinate method as set forth in NECA Tariff FCC No. 4. If the calculated miles result in a fraction, the value is rounded up to the next full mile.

Local Transport is a two-way voice frequency transmission path composed of facilities and equipment determined by the Telephone Company. This transmission path permits the transport of calls in the originating direction (from the end user end office to the customer's premises) and in the terminating direction (from the customer's premises to the end office), but not simultaneously. This transmission path may be comprised of any form or configuration of plant and equipment capable of and typically used in the telecommunications industry for the transmission of voice and associated telephone signals within the frequency bandwidth of approximately 300 to 3000 Hz.

The Telephone Company will work cooperatively with the customer in determining (1) whether the service is to be directly routed to an end office or through a Telephone Company access tandem, and (2) the directionality of the service.

(D)
(D)

ACCESS SERVICE

6. **Switched Access Service** (Cont'd)

6.5 **Rate Categories, Applications, and Regulations** (Cont'd)

6.5.2 **Local Transport** (Cont'd)

(A) Local Transport Description (Cont'd)

(D)
|
|
(D)

Switched Transport is provided at the rates and charges set forth in 6.6.

(B) Entrance Facility

The Entrance Facility Rate is assessed upon customers for the use of Telephone Company Voice Grade, DS1 and DS3 high capacity facilities, including interface arrangements, between the point of termination at the customer's premises and the Telephone Company's serving wire center. The Entrance Facility Rate is also assessed upon customers for the provisioning of Tandem Switch Signaling. The Entrance Facility is a flat-rated charge assessed per Voice Grade, DS1 or DS3 termination provided at the customer's premises. This charge will apply even if the customer designated premises and the serving wire center are co-located in a Telephone Company building. Technical descriptions of each Entrance Facility and associated interface are further described in Section 9.1. In lieu of an Entrance Facility, Switched Access may be interconnected with customer transmission facilities in accordance with Section 17.

ACCESS SERVICE

6. **Switched Access Service** (Cont'd)

6.5 **Rate Categories, Applications, and Regulations** (Cont'd)

6.5.2 **Local Transport** (Cont'd)

(C) Direct Trunked Transport

The Direct-Trunked Transport rate is assessed upon customers for the use of Voiceband, DS1 or DS3 High Capacity transport dedicated to a customer between a serving wire center to an end office (including host end offices) or from a serving wire center to a Telephone Company access tandem. Direct Trunked Transport also provides for the transmission facilities between:

- a serving wire center or end office and a Telephone Company Hub office other than the serving wire center where multiplexing is performed;

- a serving wire center or access tandem and a Telephone Company Hub office other than the serving wire center where multiplexing is performed;

- between an EIS Cross-Connect arrangement located in a Telephone Company wire center and a different serving wire center, end office or Telephone Company access tandem office.

- a serving wire center and end office where Tandem Switch Signaling is provided as described in 6.5.3(D) and 6.5.14.

The Direct-Trunked Transport Rate is flat-rated and has both distance-sensitive and nondistance-sensitive components. (D)
(D)
(D)

A Dedicated Trunk Port is applicable to the purchase of dedicated trunks terminated by that port. The Dedicated Trunk Port provides for the termination of a dedicated trunk at the end office or access tandem. The Dedicated Trunk Port is flat-rated and is assessed per voice grade or DS1 channel terminating at an end office or access tandem. The rate is determined based on whether the trunk is voicegrade or DS1.

ACCESS SERVICE

6. **Switched Access Service** (Cont'd)

6.5 **Rate Categories, Applications, and Regulations** (Cont'd)

6.5.2 **Local Transport** (Cont'd)

(C) Direct Trunked Transport (Cont'd)

(1) The Direct-Trunked Transport Mileage rate is applied on a monthly airline mile basis.

To determine the Direct-Trunked Transport airline mileage, the distance will be measured from the wire center that serves the customer's premises to the Telephone Company access tandem, end office, WSO (for WATS and WATS-type), or the end office that serves as the host for a remote office.

For traffic originating from or terminating to a remote office, the mileage will be calculated separately from the end office that serves as the host to the remote using the V&H coordinates method. The Direct-Trunked Transport Mileage Rate applies from the customer's serving wire center to the end office that serves as the host office. Traffic originating from and/or terminating to the remote will be billed Tandem-Switched Transport charges, based on mileage between the host and remote office. The Tandem-Switched Transport - Termination charge is applicable for each termination between the host and remote office. The Tandem-Switching Charge is not applicable for Tandem-Switched Transport between the end office that serves as the host to the remote office.

When Telephone Company Hubs are involved, mileage is computed and rates applied separately for each section of the Direct-Trunked Transport, i.e., customer serving wire center to Hub, Hub to Hub, Hub to Telephone Company access tandem or Hub to end office.

(2) The Direct-Trunked Transport - Fixed Rate is applied only once per facility. When two or more customer designated premises are served by a common serving wire center (i.e., mileage is zero) the fixed rate component is not applied. Except when served by a common serving wire center, the Fixed charge is applied in full whether the Telephone Company provides one or more than one mileage facility terminations. The Fixed rate does not apply when the Telephone Company provides only an intermediate portion of a mileage facility and no mileage facility terminations.

ACCESS SERVICE

6. Switched Access Service (Cont'd)

6.5 Rate Categories, Applications, and Regulations (Cont'd)

6.5.2 Local Transport

(D) Tandem-Switched Transport

The Tandem-Switched Transport Rate is assessed upon customers for the use of transport between a serving wire center and an end office that is switched at a Telephone Company access tandem. The Tandem-Switched Transport Rate may also be assessed for transport between a Telephone Company access tandem and end office, between a host end office and a remote end office and between a FGA or BSA-A dialtone office and other end offices in the local calling area. Tandem-Switched transport consists of circuits used in common by multiple customers from the Telephone Company access tandem to an end office. The Tandem-Switched Transport Rate includes four sub-elements, a Tandem-Switched Transport - Facility, a Tandem-Switched Transport - Termination, Tandem Switching Rate, and Shared Multiplexing Rate. For Toll Free originating access minutes, the Tandem Switching rate provides for tandem transport, tandem transmission, and tandem switching. No other Tandem Switched Transport usage charges will be assessed for Toll Free originating access minutes. For Other Than Toll Free originating access minutes, the Tandem-Switching Rate provides for tandem switching facilities. The Tandem Switching Rate is not applicable for transport between a host end office and a remote end office or to FGA or BSA-A Transport. (C)(x) (C)(x)

(1) The Tandem-Switched Transport - Facility rate is applied per access minute per airline mile for each Switched Access Feature Group and Basic Serving Arrangement type. Tandem-Switched Transport-Facility airline mileage will be determined as follows:

Where Direct-Trunked Transport is ordered between a serving wire center and a Telephone Company access tandem, and Tandem-Switched Transport is ordered to subtending end offices, mileage will be measured from the Telephone Company access tandem to the end office or WSO (for WATS and WATS-type).

When the end office is acting as a host office, a separate mileage calculation determines the mileage from the host office to the remote office. Traffic originating from and/or terminating to the remote will be billed Tandem-Switched Transport charges. The Tandem Switching charge does not apply to traffic between a host and remote office.

(x) Issued in compliance with the Order of the Federal Communications Commission in WC Docket No. 18-156, *In the Matter of 8YY Access Charge Reform*, FCC 20-143, released October 9, 2020.

ACCESS SERVICE

6. **Switched Access Service** (Cont'd)

6.5 **Rate Categories, Applications, and Regulations** (Cont'd)

6.5.2 **Local Transport** (Cont'd)

(D) Tandem-Switched Transport (Cont'd)

(1) (Cont'd)

Transport rates apply to the switched access minutes of use that originate/terminate at a MTSO directly connected to a Telephone Company access tandem or end office. Where the connection is made directly to an end office, Switched Transport rates (Tandem-Switched Transport or Direct-Trunked Transport, as ordered by the customer) shall apply between the end office and the serving wire center of the customer. Where the connection is made directly to a Telephone Company access tandem, Switched Transport rates (Tandem-Switched Transport or Direct-Trunked Transport, as ordered by the customer) shall apply between the Telephone Company access tandem and the serving wire center of the customer. For Telephone Company access tandem connections, Tandem-Switched Transport Facility mileage, if applicable, will be measured from the Telephone Company access tandem to the customer's serving wire center. The Tandem Switching charge shall apply to all minutes of use where the MTSO connection is made directly to a Telephone Company access tandem.

Where Tandem-Switched Transport - Facility is provided by more than one telephone company, the mileage for each will be determined as in 2.7.

(D)
(D)

(2) The Tandem-Switched Transport - Termination rate applies per access minute for each termination (i.e., the access tandem and the end office serving the end user, and the host and remote end office) for all Switched Access Feature Group or Basic Serving Arrangement types.

When both terminations are provided by the Telephone Company, the Tandem-Switched Transport - Termination rate applies twice, including those situations when the terminations are co-located, except where the Tandem-Switched Transport Termination originates or terminates to a Class 4/5 switch.

ACCESS SERVICE

6. Switched Access Service (Cont'd)

6.5 Rate Categories, Applications, and Regulations (Cont'd)

6.5.2 Local Transport (Cont'd)

(D) Tandem-Switched Transport (Cont'd)

(2) When both terminations are provided by the Telephone Company and traffic originates from or terminates to a remote office, the Tandem-Switched Transport - Termination rate applies four times (i.e., for each termination from the serving wire center to the host and for each termination from the host to the remote office.

The Tandem-Switched Transport - Termination rate applies to switched access minutes of use that originate/terminate at a MTSO directly interconnected to a Telephone Company access tandem or end office.

Where the Tandem-Switched Transport - Facility is provided by more than one telephone company, the Tandem-Switched Transport - Termination rate applies for the termination (i.e., the access tandem or the end office serving the end user) at the Telephone Company end of the Switched Transport as in 2.7. The Tandem-Switched Transport - Termination rate will not apply when the Telephone Company is the intermediate provider of the Tandem-Switched Transport - Facility.

(3) The Tandem Switching rate is usage-sensitive and is applied per access minute to all feature groups or BSAs for Tandem-Switched Transport with three exceptions. The Tandem-Switching Rate is not applicable for Tandem- (T)
Switched Transport between a host office and a remote office, nor is it applicable for FGA or BSA-A, including Extended FGA and BSA-A Terminating Traffic described in 6.5.9. The Tandem Switching rate also will not apply to (T)
access minutes that originate or terminate at the end office part of a Class 4/5 switch. (T)

(4)

For Tandem Switched Transport, a Shared Multiplexing Rate will be assessed to all minutes of use from the Telephone Company Access Tandem to an end office, except when the access minute originate or terminate at the (T)
end office part of a Class 4/5 switch. The Shared Multiplexing rate recovers multiplexing costs on the end office side (T)
of the tandem.

ACCESS SERVICE

6. Switched Access Service (Cont'd)

6.5 Rate Categories, Applications, and Regulations (Cont'd)

6.5.2 Local Transport (Cont'd)

(D) Tandem-Switched Transport (Cont'd)

(5) The Shared Turnk Port provides for the termination of a Tandem-Switched Trunk at an end office. The Shared Trunk Port is usage rated and shall be assessed to all access minutes which utilize Tandem-Switched Transport. This includes minutes of use associated with FGA service when traffic is terminated in an end office that is not the dial tone office and on minutes of use provided at a remote office.

The Shared Trunk Port charge will not apply to access minutes that originate or terminate at the end office part of a (T)
Class 4/5 switch. (T)

The Shared Trunk Port charge does not apply to switched access minutes of use that originate or terminate at MTSOs directly interconnected to a Telephone Company access tandem.

ACCESS SERVICE

6. Switched Access Service (Cont'd)

6.5 Rate Categories, Applications, and Regulations (Cont'd)

6.5.2 Local Transport (Cont'd)

(E) Interconnection Rate

The Interconnection Rate is assessed upon all customers for interconnecting with the Telephone Company's switched access network. The Interconnection Rate has two rate levels. One rate applies to customers utilizing Telephone Company transport and a different rate that is applicable to Switched Access EIS Cross Connect arrangements.

The Interconnection rate is usage-sensitive and is applied per access minute to all feature groups that utilize the Telephone Company's switched access network. It applies to all originating and terminating minutes of use whether transported via Direct-Trunked Transport, Tandem-Switched Transport, Entrance Facilities or Switched Access EIS Cross Connect Arrangements.

The Interconnection Rate does not apply to switched access minutes of use that originate or terminate at MTSOs directly interconnected to a Telephone Company access tandem office.

The application of originating and terminating rates are set forth below.

(a) Terminating per minute charge(s) apply to:

- all terminating access minutes of use;

- all originating access minutes of use associated with FGA or BSA-A Access Services used to provide Foreign Exchange Services; and

- all originating access minutes of use associated with calls placed to 500, 700, Toll Free, and 900 numbers, less (T)
  those originating access minutes of use associated with calls placed to 500, 700, Toll Free, and 900 numbers (T)
  for which the customer furnishes for each month a report, as describedi in Section 3, of either the number of calls or minutes or a report of the percent of calls or minutes that terminate in a Switched Access Service that is assessed Carrier Common Line charges.

6. Switched Access Service (Cont'd)

6.5 Rate Categories, Applications, and Regulations (Cont'd)

6.5.2 Local Transport (Cont'd)

(b) The originating per minute charge(s) apply to:

- all originating access minutes of use;
- less those originating access minutes of use associated with FGA or BSA-A Access Services used to provide Foreign Exchange Service;
- less all originating access minutes of use associated with calls placed to 500, 700, Toll Free, and 900 numbers;
- plus all originating access minutes of use associated with calls placed to 500, 700, Toll Free, and 900 numbers for which the customer furnishes for each month a report of either the number of calls or minutes or a report of the percent of calls or minutes that terminate in a Switched Access Service that is assessed Carrier Common Line charges, and for which a corresponding reduction in the number of terminating access minutes of use has been made as set forth in (a).

(F) Multiplexing

Multiplexing provides for arrangements to convert a single higher capacity or bandwidth circuit for bulk transport to several lower capacity or bandwidth circuits. Monthly rates and nonrecurring charges for multiplexing apply as follows: 1) the DS3/DS1 Multiplexing Charge applies to all DS3 to DS1 multiplexing arrangements that are located in a Telephone Company wire center; and 2) the DS1/Voice Multiplexing Charge applies to all DS1 Entrance Facility (T) and Direct-Trunked Transport circuits that terminate in an analog office and where the multiplexer performs DS1/Voice multiplexing functions. (D)

(G) Dedicated Switched Access

The Dedicated Switched Access Transport Rate is assessed upon customers subscribing to CCS7 Access Service for the use of facilities between the customer's common channel signaling network and the Telephone Company's signaling transfer point. It is a flat rated, distance-sensitive monthly rate. This rate element is further described in 6.2.7.

ACCESS SERVICE

6. **Switched Access Service** (Cont'd)

6.5 **Rate Categories, Applications, and Regulations** (Cont'd)

6.5.2 **Local Transport** (Cont'd)

(H) Mileage Measurement Exceptions

(1) The Telephone Company may reconfigure its local exchange plant as required in the normal operation of its business. If such network reconfiguration results in a changed location of the IC serving wire center the Telephone Company will provide the IC with a minimum 6 months notice. The Local Transport Mileage measurement will be based upon the new serving wire center's V & H coordinates and the end office switch V & H coordinates.

(2) For FGA and BSA-A, the Entrance Facility charge shall apply between the customer's premises and the customer's serving wire center. If the serving wire center is not the dial tone office, Direct-Trunked Transport shall apply between the serving wire center and the dial tone office. Tandem-Switched Transport (Facility and Termination) rates, excluding the Tandem Switching charge, shall apply between the dial tone office and the end office for FGA or BSA-A traffic that originates and/or terminates within the FGA or BSA-A Access Area.

For FGA and BSA-A calls terminated on an extended basis outside the FGA or BSA-A Access Area, but within the LATA, mileage in the terminating direction is also calculated on the airline distance between the FGA or BSA-A dial tone office and the end office switch where the call terminates as set forth in 6.5.9 (A) following.

ACCESS SERVICE

6. **Switched Access Service (Cont'd)**

6.5 **Rate Categories, Applications, and Regulations (Cont'd)**

6.5.2 **Local Transport (Cont'd)**

(H) Mileage Measurement Exceptions **(Cont'd)**

(3) When the Alternate Traffic Routing optional feature is provided with Feature Group D, 500 Access Service, Toll Free (D)
Access Service, and 900 Access Service or as a BSE with BSA-B and BSA-D the Local Transport access minutes (D)
will be apportioned between the two trunk groups used to provide this feature. Such apportionment will be made using standard Telephone Company traffic engineering methodology and will be based on the last trunk CCS desired for the high usage group, as described in 6.3.2(N), and the total busy hour minutes of capacity ordered to the end office, when the feature is provided at an end office switch, or to the subtending end offices when the feature is provided at a Telephone Company access tandem. This apportionment will serve as the basis for Local Transport mileage calculation. For FGD and BSA-D, the apportionment will be based on the actual measured data which is recorded against the specific trunk group that carried a particular call.

(4) Reserved for Future Use (C)
(D)
|
|
(D)

(5) The Tandem-Switched Transport - Facility rate applies to the switched access minutes of use that originate/terminate at a MTSO directly interconnected to a Telephone Company access tandem or end office. The mileage for access is calculated on an airline mile basis, using the V&H coordinate method, between the customer's SWC and the SWC of the MTSO.

ACCESS SERVICE

6. Switched Access Service (Cont'd)

6.5 Rate Categories, Applications, and Regulations (Cont'd)

(D)

(D)

(D)

ACCESS SERVICE

6. **Switched Access Service** (Cont'd)

6.5 **Rate Categories, Applications, and Regulations** (Cont'd)

6.5.3 **End Office**

The End Office rate category provides the local end office switching and end user termination functions necessary to complete the transmission of Switched Access communications to and from the end users served by the local end office. The End Office Rate category includes the Local Switching Information Surcharge and Shared Trunk Port rate elements.

End Office rates (Local Switching Information Surcharge and Shared Trunk Port) do not apply to switched access minutes of use that originate or terminate at a Mobile Telephone Switching Office (MTSO) directly interconnected to a Telephone Company access tandem office.

(A) Local Switching

The Local Switching rate element provides for the use of end office switching equipment, the termination of end user common lines at the local end office, and the termination of calls at a Telephone Company intercept operator or recording. The intercept operator or recording tells a caller why a call could not be completed and, if possible, provides the correct number.

Where end offices are appropriately equipped, international dialing may be provided. International dialing provides the capability of switching international calls with service prefix and address codes having more digits than are capable of being switched through a standard FGD or BSA-D equipped end office. (D)

Local Switching is available on a bundled or unbundled basis. Local Switching - Bundled (EOSB) rates apply to Switched Access services provided as Feature Groups. Local Switching - Unbundled (EOSU) rates apply to Switched Access services provided as Basic Serving Arrangements. EOSB and EOSU rates are applied on a premium basis as discussed in 6.5.6. (D)

6. **Switched Access Service** (Cont'd)

6.5 **Rate Categories, Applications, and Regulations** (Cont'd)

6.5.3 **End Office** (Cont'd)

(B) Information Surcharge

Information Surcharge rates are assessed to a customer based on the total number of access minutes. Information Surcharge rates are set forth in 6.6 following. The application of these rates with respect to individual Switched Access Arrangements is set forth in 6.5.6.

(C) Toll Free Data Base Query Service

Query usage charges for Toll Free Data Base Query Service shown in 6.2.5(D) apply as follows:

(1) A Basic Toll Free Data Base Query charge will apply for each basic Toll Free call query completed at the Telephone Company's Toll Free data base. Per query charges are accumulated over a monthly period and billed to the customer on a monthly basis.

(2) A Premium Toll Free Data Base Query charge will apply for each premium Toll Free call query completed at the Telephone Company's Toll Free data base. The Premium Toll Free Data Base Query charge is in addition to the (T) Basic Toll Free Data Base Query charge. Per query charges are accumulated over a monthly period and billed to (T) the customer on a monthly basis.

ACCESS SERVICE

6. **Switched Access Service** (Cont'd)

6.5 **Rate Categories, Applications, and Regulations** (Cont'd)

6.5.3 **End Office** (Cont'd)

(D) Tandem Switch Signaling

Tandem Switch Signaling, offered in conjunction with FGD and BSA-D Switched Access, 500 SAC Access Service, or 900 SAC Access Service with either multifrequency address signaling or SS7 Out of Band Signaling Access Service, provides the carrier identification code (CIC) and the OZZ code or circuit code as described in 6.3.2(AA) to determine the customer and trunk group(s) where traffic will be routed.

Rate regulations applicable to Tandem Switch Signaling are found in 6.5.14.

(E) Shared Trunk Port

The Shared Trunk Port provides for the termination of a Tandem-Switched Trunk at an end office. The Shared Trunk Port is usage rated and shall be assessed to the applicable originating or terminating access minutes which (C) utilize Tandem-Switched Transport. This includes minutes of use associated with FGA service when traffic is terminated in an end office that is not the dial tone office and on minutes of use provided at a remote office.

The Shared Trunk Port charge does not apply to switched access minutes of use that originate or terminate at MTSOs directly interconnected to a Telephone Company access tandem.

ACCESS SERVICE

6. **Switched Access Service** (Cont'd)

6.5 **Rate Categories, Applications, and Regulations** (Cont'd)

6.5.4 **Nonrecurring Charges**

Nonrecurring charges are one-time charges that apply for specific work activities in conjunction with providing switched access service or a change to an existing Switched Access Arrangement.

(A) Switched Access Installation and Ordering Charges

(1) Service Installation Charge

For Entrance Facilities, this charge applies to customer requests for installation of Switched Access Entrance Facilities from the customer premises to the serving wire center. The Service Installation Charge applies on a per Entrance Facility basis and is dependent upon the type of Entrance Facility ordered (i.e., Voice Grade, DS1 or DS3). (Z) Changes in the type of Entrance Facility will be treated as a discontinuance of one type of service and a start of another. The Service Installation Charge shall apply to the new Entrance Facility installation. (D)

For multiplexing, this charge applies per multiplexing arrangement ordered and is dependent upon the type of multiplexing performed.

The Service Installation Charge does not apply to CCS7 Access service installations. Nonrecurring Charges applicable to CCS7 Access services are described in 6.5.4.

ACCESS SERVICE

6. **Switched Access Service** (Cont'd)

6.5 **Rate Categories, Applications, and Regulations** (Cont'd)

6.5.4 **Nonrecurring Charges (Cont'd)**

(A) Switched Access Installation and Ordering Charges

(2) Switched Access Ordering Charge

This charge, applied on a per ASR basis, is associated with the work performed by the Telephone Company in connection with the receiving, recording and processing of service requests. The Switched Access Ordering Charge applies to all requests to establish Entrance Facilities, Direct-Trunked Transport Facilities, and Tandem-Switched Transport Facilities. Where Entrance Faculties and Direct-Trunked and/or Tandem-Switched Transport are ordered on a single ASR, only one Switched Access Ordering Charge applies. This charge is in addition to any Service Installation Charge for Entrance Facility installations.

The Switched Access Ordering Charge also applies to requests to activate additional trunks or to increase BHMC on existing Switched Transport Facilities, changes in the type of Feature Group or Direct-Trunked Transport, and for any modifications or changes to existing services that are not considered an administrative change as described in 6.5.4(B).

This charge also applies, per ASR, for the installation, addition, change, rearrangement or move of EIS Switched and Special Access Service facilities, except as specified in 6.5.4(B).

ACCESS SERVICE

6. **Switched Access Service** (Cont'd)

6.5 **Rate Categories, Applications, and Regulations** (Cont'd)

6.5.4 **Nonrecurring Charges (Cont'd)**

(A) Switched Access Installation and Ordering Charges (Cont'd) (T)

(D)

(D)
|
|
|
|
|
|
(D)

(D)
|
|
|
|
|
|
(D)

ACCESS SERVICE

6. **Switched Access Service** (Cont'd)

6.5 **Rate Categories, Applications, and Regulations** (Cont'd)

6.5.4 **Nonrecurring Charges** (Cont'd)

(B) Administrative Changes

Administrative changes will be made without charge(s) to the customer. Administrative changes are as follows:

- Change of customer name,
- Change of customer or customer's end user premises address when the change of address is not a result of a physical relocation of equipment,
- Change in billing date (name, address, or contact name or telephone number),
- Change of agency authorization,
- Change of customer circuit identification,
- Change of billing account number,
- Change of customer test line number,
- Change of customer or customer's end user contact name or telephone number, and
- Change of jurisdiction.

(C) Moves

A move involves a change in the physical location of one of the following:

- The point of termination at the customer's premises
- The customer's premises

The charges for the move are dependent on whether the move is to a new location within the same building or to a different building.

ACCESS SERVICE

6. **Switched Access Service** (Cont'd)

6.5 **Rate Categories, Applications, and Regulations** (Cont'd)

6.5.4 **Nonrecurring Charges** (Cont'd)

(C) Moves (Cont'd)

(1) Moves Within the Same Building

When the move is to a new location within the same building, the Telephone Company shall be responsible for the physical relocation of the Point of Termination and any associated Network Terminating Wire as outlined in applicable Telephone Company operating practices. The charge for the move except for moves within a wire center to an EIS as described in Section 17, will be the Switched Access Ordering Charge as set forth in (A)(1) preceding. There will be no change in the minimum period requirements.

(2) Moves to a Different Building

Moves to a different building and moves of the point of termination within a wire center to an EIS as described in Section 17, will be treated as a discontinuance and start of service and the Telephone Company shall provide a physical Point of Termination and any necessary Network Terminating Wire located at the new building as outlined in applicable Telephone Company operating practices. All associated nonrecurring charges will apply per service. New minimum period requirements will be established for the new service. The customer will also remain responsible for satisfying all outstanding minimum period charges for the discontinued service.

(D) NXX Translation Nonrecurring Charge

The NXX Translation Nonrecurring Charge, as set forth in 6.6, shall apply to each 500 or 900 NXX code activated or deactivated in a Telephone Company switch capable of performing the customer identification function for 500 Access Service or 900 Access Service. The total nonrecurring charge per customer order shall be determined by multiplying the number of switches in which the Telephone Company must activate or deactivate the NXX code within the serving area specified by the customer's order times the appropriate nonrecurring charge. Separate nonrecurring charges apply to the activation or deactivation of the first NXX code contained on the customer's ASR and to the activation or deactivation of each additional NXX code contained on the same ASR. In addition, the Switched Access Ordering Charge, as set forth in 6.5.4(A)(2) will apply per ASR submitted for the activation or deactivation of NXX codes.

ACCESS SERVICE

6. **Switched Access Service** (Cont'd)

6.5 **Rate Categories, Applications, and Regulations** (Cont'd)

6.5.4 **Nonrecurring Charges** (Cont'd)

(E) Change of Feature Group or BSA Type

Changes from one type of Feature Group or BSA to another will be treated as a discontinuance of one type of service and a start of another and new minimum period obligations will be established. Nonrecurring charges will apply. (C)

(D)

(D)

ACCESS SERVICE

6. **Switched Access Service** (Cont'd)

6.5 **Rate Categories, Applications, and Regulations** (Cont'd)

6.5.4 **Nonrecurring Charges** (Cont'd)

(F) Signaling System 7 (SS7) Out of Band Signaling

(1) The Switched Access Ordering Charge will apply for a change in FGD or BSA-D switched access and Toll Free Access signaling from multifrequency address signaling to SS7 Out of Band Signaling except as specified in 6.5.4(F)(1). (T)

ACCESS SERVICE

6. **Switched Access Service** (Cont'd)

6.5 **Rate Categories, Applications, and Regulations** (Cont'd)

6.5.5 **Determination of Access Minutes**

(A) Measurement and Determination of Access Minutes

Customer traffic to end offices will be measured (i.e., recorded) by the Telephone Company at end offices or Telephone Company access tandems. Originating and terminating calls will be measured by the Telephone Company, as set forth in (B) through (F) to determine the basis for computing chargeable access minutes. In the event the customer message detail is not available because the Telephone Company lost or damaged tapes or experienced recording system outages, the Telephone Company will estimate the volume of lost customer access minutes of use based on previous actual recorded usage. The Customer's facilities shall provide the necessary on-hook, off-hook, answer and disconnect supervision.

For terminating calls over FGA, FGB, BSA-A, BSA-B to 500, Toll Free, or 900, and FGD or BSA-D, and for (D)
originating calls over FGA, FGB, FGD, BSA-A, BSA-B, BSA-D and 500 Access Service, Toll Free Access Service or
900 Access Service from equal access offices, the measured minutes are the chargeable access minutes. When (D)
mixed interstate and intrastate Switched Access Service is provided the percent of interstate usage is determined as set forth in (H).

For FGB, FGD, BSA-B and BSA-D access minutes or fractions thereof, the exact value of the fraction being a (D)
function of the switch technology where the measurement is made, are accumulated over the billing period for each end office, and are then rounded up to the nearest access minute for each end office.

For FGA and BSA-A access minutes or fractions thereof, the exact value of the fraction being a function of the switch technology where the measurement is made, are accumulated over the billing period of each line or hunt group, and are then rounded up to the nearest access minute for each line or hunt group.

ACCESS SERVICE

6. **Switched Access Service** (Cont'd)

6.5 **Rate Categories, Applications, and Regulations** (Cont'd)

6.5.5 **Determination of Access Minutes** (Cont'd)

(B) Feature Group A and BSA-A Usage Measurement

For originating calls over FGA and BSA-A, usage measurement begins upon acknowledgment from the customer.

The measurement of originating call usage over FGA or BSA-A ends when the originating FGA or BSA-A entry switch receives an on-hook supervisory signal from either the originating end user's end office, indicating the originating end user has disconnected, or the customer's point of termination, which ever is recognized first by the entry switch.

For terminating calls over FGA or BSA-A, usage measurement begins when the terminating FGA or BSA-A entry switch receives an off-hook supervisory signal from the terminating end user's end office, indicating the terminating end user has answered.

The measurement of terminating call usage over FGA or BSA-A ends when the terminating FGA or BSA-A entry switch receives an on-hook supervisory signal from either the terminating end user's end office, indicating the terminating end user has disconnected, or the customer's point of termination, whichever is recognized first by the entry switch.

(C) Feature Group B and BSA-B Usage Measurement

For originating calls over FGB and BSA-B, usage measurement begins when the originating FGB or BSA-B entry switch receives answer supervision forwarded from the customer's point of termination, indicating the customer's equipment has answered.

ACCESS SERVICE

6. **Switched Access Service** (Cont'd)

6.5 **Rate Categories, Applications, and Regulations** (Cont'd)

6.5.5 **Determination of Access Minutes** (Cont'd)

(C) Feature Group B and BSA-B Usage Measurement (Cont'd)

The measurement of originating call usage over FGB and BSA-B ends when the originating FGB or BSA-B entry switch receives disconnect supervision from either the originating end user's end office, indicating the originating end user has disconnected, or the customer's point of termination, whichever is recognized first by the entry switch.

For terminating calls over FGB and BSA-B, usage measurement begins when the terminating FGB or BSA-B entry switch receives answer supervision from the terminating end user's end office, indicating the terminating end user has answered.

The measurement of terminating call usage over FGB or BSA-B ends when the terminating FGB or BSA-B entry switch receives disconnect supervision from either the terminating end user's end office, indicating the terminating end user has disconnected, or the customer's point of termination, which ever is recognized first by the entry switch.

(D) Reserved for Future Use (C)

(D)
|
|
|
|
|
|
|
|
|
|
(D)

ACCESS SERVICE

6. **Switched Access Service** (Cont'd)

6.5 **Rate Categories, Applications, and Regulations** (Cont'd)

6.5.5 **Determination of Access Minutes** (Cont'd)

(D)

(D)

ACCESS SERVICE

6. **Switched Access Service** (Cont'd)

6.5 **Rate Categories, Applications, and Regulations** (Cont'd)

6.5.5 **Determination of Access Minutes** (Cont'd)

(D)

(D)

ACCESS SERVICE

6. **Switched Access Service** (Cont'd)

6.5 **Rate Categories, Applications, and Regulations** (Cont'd)

6.5.5 **Determination of Access Minutes** (Cont'd)

(E) (1) Feature Group D and BSA-D Usage Measurement

For originating calls over FGD and BSA-D with multifrequency (MF) signaling, usage measurement begins when the originating FGD or BSA-D entry switch receives the first wink supervisory signal forwarded from the customer's point of termination.

For originating calls over FGD or BSA-D with SS7 Out of Band Signaling, usage measurement for direct trunks begins when the FGD or BSA-D first point of switching sends an Initial Address Message. Usage measurement for tandem trunks begins when the FGD or BSA-D first point of switching receives an Exit Message.

The measurement of originating call usage over FGD or BSA-D with MF signaling ends when the originating FGD or BSA – D entry switch receives disconnect supervision from either the originating end user's end office, indicating the originating end user has disconnected, or the customer's point of termination, whichever is recognized first by the entry switch.

The measurement of originating call usage over FGD or BSA-D with SS7 Out of Band Signaling end when a Release Message is sent or received by the originating end user's end office whichever occurs first.

For terminating calls over FGD and BSA-D with MF signaling, or FGD and BSA-D with SS7 Out of Band Signaling, usage measurement begins when the terminating FGD or BSA-D entry switch receives answer supervision from the terminating end user's end office, indicating the terminating end user has answered.

ACCESS SERVICE

6. **Switched Access Service** (Cont'd)

6.5 **Rate Categories, Applications, and Regulations** (Cont'd)

6.5.5 **Determination of Access Minutes** (Cont'd)

(E) (1) Feature Group D and BSA-D Usage Measurement (Cont'd)

The measurement of terminating call usage over FGD and BSA-D with MF signaling ends when the terminating FGD or BSA-D entry switch receives disconnect supervision from either the terminating end user's end office, indicating the terminating end user has disconnected, or the customer's point of termination, whichever is recognized first by the entry switch.

The measurement of terminating call usage over FGD and BSA-D with SS7 Out of Band Signaling ends when the FGD or BSA-D first point of switching receives or sends a Release Message, whichever occurs first.

(2) FGD and BSA-D Switched Access Service With 950-XXXX

When a customer orders FGD or BSA-D Switched Access Service with 950-XXXX Access, as described in 6.3.2(AB), to be included with the installation of new FGD or BSA-D switched access facilities, appropriate Switched Access Installation Charges and Switched Access Ordering Charges will apply for the installation of the new FGD or BSA-D switched access facilities.

When a customer orders FGD or BSA-D Switched Access Service with 950-XXXX Access to be added to an existing FGD or BSA-D switched access service, only the Switched Access Ordering Charge and the Design Change Charge will apply for the addition of this optional end office service arrangement.

ACCESS SERVICE

6. **Switched Access Service** (Cont'd)

6.5 **Rate Categories, Applications, and Regulations** (Cont'd)

6.5.5 **Determination of Access Minutes** (Cont'd)

(F) 500, Toll Free, and 900 Access Service Usage Measurement (T)

For originating calls over 500, Toll Free, and 900 Access Service with MF Signaling, usage measurement begins (T) when the originating 500, Toll Free, or 900 Access Service entry switch receives answer supervision from the (T) customer's point of termination, indicating the called party has answered.

For originating calls over 500, Toll Free, and 900 Access Service using SS7 Out of Band Signaling, usage (T) measurement for direct trunks begins when the first point of switching sends an Initial Address Message. Usage measurement for tandem trunks begins when the first point of switching receives an Exit Message.

The measurement of originating call usage over 500, Toll Free, and 900 Access Service with MF Signaling ends (T) when the originating 500, Toll Free, or 900 Access Service entry switch receives disconnect supervision from either (T) the originating end user's end office, indicating the originating end user has disconnected, or the customer's point of termination, whichever is recognized first by the entry switch.

The measurement of originating call usage over 500, Toll Free, and 900 Access Service with SS7 Out of Band (T) Signaling ends when a Release Message is sent or received by the originating end user's end office, whichever occurs first.

ACCESS SERVICE

6. **Switched Access Service** (Cont'd)

6.5 **Rate Categories, Applications, and Regulations** (Cont'd)

6.5.5 **Determination of Access Minutes** (Cont'd)

(G) Reserved for Future Use (C)

(D)
|
|
|
|
|
|
|
|
|
|
|
|
|
|
|
|
|
(D)

ACCESS SERVICE

6. **Switched Access Service** (Cont'd)

6.5 **Rate Categories, Applications, and Regulations** (Cont'd)

6.5.5 **Determination of Access Minutes** (Cont'd)

(D)
|
|
|
|
|
|
|
|
|
|
|
|
|
|
(D)

ACCESS SERVICE

6. **Switched Access Service** (Cont'd)

6.5 **Rate Categories, Applications, and Regulations** (Cont'd)

6.5.5 **Determination of Access Minutes** (Cont'd)

(H) Jurisdictional Report Requirements

(1) Jurisdictional Reports

(a) Percent Interstate Usage (PIU)

(1) When the Telephone Company receives sufficient call detail to permit it to determine the jurisdiction of some or all originating and terminating access minutes of use, the Telephone Company will use that call detail to render bills for those minutes of use and will not use customer reported Percent Interstate Usage (PIU) factors to determine the jurisdiction of those minutes of use. (T) (D (D)

The Telephone Company will apply the PIU factor, provided by the customer as set forth in (2) following, only to minutes of use for which the Telephone Company does not have sufficient call detail to determine jurisdiction. The customer-provided PIU factor will be used until the customer provides an updated PIU factor as set forth in (1)(c) following. No prorating or back billing will be done based on the updated report. (C) I (C)

(2) When the customer initially orders Switched Access Service(s) the customer will state in its order (Access Service Request) a PIU factor. This factor will be used by the Telephone Company as the customer-provided PIU factor until the customer provides an updated PIU factor as required in (1)(c) following. For each service listed below, the customer may provide separate PIU factors in accordance with (1) preceding and (3) following. (T) (C) (C)

Material previously shown on this page now appears on Page 6-150.1.

ACCESS SERVICE

6. **Switched Access Service** (Cont'd)

6.5 **Rate Categories, Applications, and Regulations** (Cont'd)

6.5.5 **Determination of Access Minutes** (Cont'd)

(H) Jurisdictional Report Requirements (Cont'd)

(1) Jurisdictional Reports (Cont'd)

(a) Percent Interstate Usage (PIU) (Cont'd)

(2) (Cont'd)

- Feature Group A (FGA) Switched Access Service Notes 1, 2
- Feature Group B (FGB) Switched Access Service Notes 1, 2
- Feature Group D (FGD) Switched Access Service Notes 1, 2
- Basic Serving Arrangement A (BSA–A) Notes 1, 2, 3
- Basic Serving Arrangement B (BSA-B) Notes 1, 2, 3
- Basic Serving Arrangement D (BSA-D) Notes 1, 2, 3
- 500 Access Services Notes 1, 2
- 700 Access Services Notes 1, 2
- Toll Free Services Notes 1, 2 (T)
- 900 Access Services Notes 1, 2

When a customer submits an order for Switched Access services, the customer must state the Percentage of Interstate Usage (PIU) on a statewide, LATA, billing account number (BAN) or end office level.

When the customer provides PIU factors, the Company will subtract the developed PIU factor from 100 and the difference is the percent intrastate usage. The sum of the interstate and intrastate percentages will equal 100 percent. The customer may only provide a PIU factor that is a whole number (a number from 0 to 100).

NOTE 1: The PIU factors will apply to all associated elements and services, e.g., Carrier Common Line, End Office Switching, Information Surcharge, Interconnection Charge, End Office Dedicated Trunk Port, Access Tandem Dedicated Trunk Port, Shared Trunk Port and, if applicable, Tandem Switched Transport and Tandem Switching.

NOTE 2: The PIU factor for Switched Access services must be provided by the customer of record when used in conjunction with Switched EIS as described in Section 17 or used in conjunction with Tandem Switch Signaling.

NOTE 3: When determining the jurisdiction of Switched Access traffic provided via a BSA or Basic Service Element (BSE) and the intrastate equivalent of the BSA or BSE is only available on a bundled feature group basis, intrastate usage will be prorated to the bundled intrastate feature group equivalent of the BSA.

(D)
(D)

ACCESS SERVICE

6. **Switched Access Service** (Cont'd)

6.5 **Rate Categories, Applications, and Regulations** (Cont'd)

6.5.5 **Determination of Access Minutes** (Cont'd)

(H) Jurisdictional Report Requirements (Cont'd)

(1) Jurisdictional Reports (Cont'd)

(a) Percent Interstate Usage (PIU) (Cont'd)

(3) For purposes of developing the projected interstate percentage for Feature Group D (or BSA-D), the customer shall consider every call that originates from a calling party in one state and terminates to a called party in a different state to be interstate communications. The customer shall consider every call that terminates to a called party within the same state as the state where the calling party is located to be intrastate communications. The manner in which a call is routed through the telecommunications network does not affect the jurisdiction of a call, i.e., a call between two points within the same state is an intrastate call even if it is routed through another state. (D)

For Feature Group A (or BSA-A) and Feature B (or BSA-B), pursuant to Federal Communications Commission order FCC 85-145 adopted April 16, 1985, interstate usage is to be developed as though every call that enters a customer network at a point within the same state as that in which the called station is situated is an intrastate communication and every call that enters a customer's network at a point in a state other than that where the called station is situated is an interstate communication.

ACCESS SERVICE

6. **Switched Access Service** (Cont'd)

6.5 **Rate Categories, Applications, and Regulations** (Cont'd)

6.5.5 **Determination of Access Minutes** (Cont'd)

(H) Jurisdictional Report Requirements (Cont'd)

(1) Jurisdictional Reports (Cont'd)

(b) Entrance Facilities and Direct-Trunked Transport Facilities

The Telephone Company will develop a PIU factor to apply to Entrance Facility and Direct-Trunked Transport rate elements when sufficient call detail exists. The Telephone Company will apply the PIU factor provided by the customer as set forth in 6.5.5(H)(1)(a)(2) only when the Telephone Company does not have sufficient data to develop a PIU factor. (N) (N)

A customer may provide a separate PIU factor for each rate element (Entrance Facility, Direct-Trunked Transport) at a BAN or higher reporting level reflecting the originating and terminating traffic of all Switched Access services that use such facilities. A consolidated PIU factor for all Entrance Facility and Direct-Trunked Transport elements may be provided at the option of the customer if such PIU factor is representative of the actual interstate use of the service. (C) (C) (D) (D)

(c) Jurisdictional Report Updates (D) (D)

The customer may update the interstate and intrastate jurisdictional reports on a quarterly basis. The reports will be based on the prior three months and will be due within fifteen days after the end of the quarter beginning with the completion of the first full quarter of service. In the event that the Telephone Company does not have sufficient date to calculate PIU factors, these factors will be applied to activity dated on or after the first day of the next calendar month, which begins at least 15 business days after the day on which the revised report or letter is received. (T) (C) (C)

In the event that the Telephone Company does not have sufficient data to rely on actual call detail or to develop a PIU factor, the revised report or letter will serve as the basis for the next three months' billing and will be effective on the bill date for that service. If the customer does not supply an updated quarterly report or letter, the Telephone Company will assume the customer-provided PIU factors to be the same as those provided in the last quarterly report or letter accepted by the Telephone Company. (C) (C)

For those cases in which a quarterly report or letter has never been received from the customer, the Telephone Company will assume the customer-provided PIU factors to be the same as provided in the order for service.

A customer may file jurisdictional reports aggregating usage at a statewide, LATA, BAN (Billing Account Number) or end office level.

ACCESS SERVICE

6. **Switched Access Service** (Cont'd)

6.5 **Rate Categories, Applications, and Regulations** (Cont'd)

6.5.5 **Determination of Access Minutes** (Cont'd)

(H) Jurisdictional Report Requirements (Cont'd)

(1) Jurisdictional Reports (Cont'd)

(d) Maintenance of Customer Records

The customer shall retain for a minimum of six months call detail records that substantiate the interstate percent provided to the Telephone Company as set forth in (H)(1)(c) preceding for Switched Access Service. Such records shall consist of (1) and (2) following, if applicable:

(1) All call detail records such as work papers and/or backup documentation including paper or any other form of records for billed customer traffic, call information including call terminating address (i.e., called number), the call duration, all originating and terminating trunk groups or access lines over which the call is routed, and the point at which the call enters the customer's network and; (D)

(2) If the customer has a mechanized system in place that calculated the PIU factor, then a description of that system and the methodology used to calculate the PIU factor must be furnished and any other pertinent information (such as but not limited to flowcharts, source code, etc.) relating to such system must also be made available.

(e) Jurisdictional Report Verification

The customer will maintain records of call detail from which the jurisdictional determination is made. For verification purposes the Telephone Company may request that these records be made available for inspection and audit on not more than an annual basis. Such audit may be conducted by independent auditors if the Telephone Company and the customer, or the customer alone is willing to pay the expense.

ACCESS SERVICE

6. Switched Access Service (Cont'd)

6.5 Rate Categories, Applications, and Regulations (Cont'd)

6.5.5 Determination of Access Minutes (Cont'd)

(D)

(D)

(This page filed under Transmittal No. 815.)

ACCESS SERVICE

6. Switched Access Service (Cont'd)

6.5 Rate Categories, Applications, and Regulations (Cont'd)

6.5.5 Determination of Access Minutes (Cont'd)

(H) Jurisdictional Report Requirements (Cont'd)

(4) (x)

(x)

(x) Filed under authority of Special Permission No. 02-141 of the Federal Communications commission to withdraw material originally filed under Transmittal No. 250 and to reinstate regulations currently in effect.

ACCESS SERVICE

6. **Switched Access Service** (Cont'd)

6.5 **Rate Categories, Applications, and Regulations** (Cont'd)

6.5.6 **Determination of Rates**

(A) Rates for the Local Transport Interconnection Charge, End Office Switching, Information Surcharge, and the Shared Trunk Port rates are applied as premium rates. The End Office Switching premium rates are further differentiated based upon the directionality of the traffic carried over the Switched Access Service. The Entrance Facility, Direct-Trunked Transport, Tandem-Switched Transport, multiplexing and EIS Cross Connect rate elements are not subject to premium rating. (N) (N)

The Composite Terminating End Office Charge (as set forth in 6.6.1(A), 6.6.6(A), 6.6.7(A), 6.6.9(A), and 6.6.10(A)) applies to all terminating access minutes of use. (N) (N)

(1) The following rules provide the basis for applying the rates and charges:

(a) Premium rates apply to all: FGA, FGB, FGD, BSA-A, BSA-B, and BSA-D access minutes; and

(b) all switched access minutes of use that originate or terminate at a Mobile Telephone Switching Office (MTSO) directly interconnected to a Telephone Company access tandem office or to an end office.

ACCESS SERVICE

6. **Switched Access Service** (Cont'd)

6.5 **Rate Categories, Applications, and Regulations** (Cont'd)

6.5.6 **Determination of Rates** (Cont'd) (D)

(D)

(D)

(D)

(D)

(D)

(D)

ACCESS SERVICE

6. **Switched Access Service** (Cont'd)

6.5 **Rate Categories, Applications, and Regulations** (Cont'd)

6.5.6 **Determination of Premium Rates** (Cont'd) (D)

(D)

(D)

ACCESS SERVICE

6. **Switched Access Service** (Cont'd)

6.5 **Rate Categories, Applications, and Regulations** (Cont'd)

(D)

(D)
|
|
|
|
|
|
(D)

6.5.7 **Minimum Periods and Charges**

(A) Minimum Periods

Switched Access Service is provided for a minimum period of one month.

(B) Minimum Monthly Charge

Switched Access Service is subject to a minimum monthly charge. The minimum charge applies for the total capacity of service provided.

For all Switched Access Arrangements, the minimum monthly charge is the sum of the Local Switching, Local Transport and Information Surcharge charges set forth in 6.6 and the Carrier Common Line charges set forth in 3.7 for the measured usage for the month. (D)

ACCESS SERVICE

6. **Switched Access Service** (Cont'd)

6.5 **Rate Categories, Applications, and Regulations** (Cont'd)

6.5.8 **Application of Rates for FGA and BSA-A Extension Service**

When a FGA or BSA-A extension service is provided with additional terminations of the service at different building(s) in the same or a different Local Serving Area, the FGA or BSA-A extensions within the Local Serving Area are provided and charged for under the Telephone Company's local and/or general exchange service tariffs, and the FGA or BSA-A extensions in different Local Serving Areas are provided and charged for as Special Access Service. The applicable rate elements which may apply are: A Voice Grade Circuit Termination, Circuit Mileage, and Signaling Capability (optional features and functions). All appropriate monthly rates and nonrecurring charges set forth in 7.5.6 following will apply.

ACCESS SERVICE

6. **Switched Access Service** (Cont'd)

6.5 **Rate Categories, Applications, and Regulations** (Cont'd)

6.5.9 **Application of Rates for Extended FGA and BSA-A Terminating Service**

(A) For calls established on a 1+ or expanded seven digit measured calling basis, outside the specific FGA or BSA-A Access Area, however inside the LATA, in conjunction with terminating FGA or BSA-A traffic to an end office, the following rates apply:

- for each access minute, the rates per access minute for Local Switching and the Information Surcharge.

- for each access minute, the Tandem-Switched Transport Facility rate per access minute per airline mile and the Tandem-Switched Transport-Termination per access minute per termination.

When the serving wire center of the customer's premises is the dial tone office, the Tandem-Switched Transport-Facility rate is applicable and mileage is measured from the serving wire center (i.e., the dial tone office) of the customer's premises to the end office.

When the serving wire center of the customer's premises is not the dial tone office, the Direct-Trunked Transport rate is applicable for mileage measured between the serving wire center of the customer's premises and the dial tone office. The Tandem-Switched Transport-Facility rate is applicable for mileage measured between the dial tone office and the end office.

The Tandem-Switching rate is not applicable for Extended FGA or BSA-A terminating traffic.

(D)
(D)
(D)

(B) When FGA or BSA-A terminating traffic is extended outside the LATA, Switched Access rate elements will be billed to the FGA or BSA-A customer for the terminating interLATA access function provided via the FGA or BSA-A connection, and Switched Access rate elements will be billed to the IC providing the interLATA service to the FGA or BSA-A customer for the originating interLATA access function.

(C) Rates for FGA and BSA-A calls terminated to NXXs outside the FGA or BSA-A Access Area as set forth in the preceding paragraphs are in addition to the applicable FGA and BSA-A rates charged within the FGA or BSA-A Access Area for each such call.

ACCESS SERVICE

6. **Switched Access Service** (Cont'd)

6.5 **Rate Categories, Applications, and Regulations** (Cont'd)

6.5.10 **Network Blocking Charge for Feature Group D and BSA-D**

In the event that a customer's FGD or BSA-D trunk group blocking threshold stated below is exceeded, the customer will be notified by the Telephone Company to increase its capacity (busy hour minutes of capacity or quantities of trunks) when excessive trunk group blocking occurs on groups carrying FGD or BSA-D traffic and the measured access minutes for that hour exceed the capacity purchased. The blocking thresholds are predicted on time consistent, hourly measurements over a 30 day period excluding Saturdays, Sundays and national holidays. If the order for additional capacity has not been received by the Telephone Company within 15 days of the notification, the Telephone Company will bill the customer, at the rate set forth in 6.5.8, for each overflow in excess of the blocking threshold when (1) the average "30 day period" overflow exceeds the threshold level for any particular hour and (2) the "30 day period" measured average originating or two-way usage for the same clock hour exceeds the capacity ordered.

Blocking Thresholds

Trunks in Service	1%	1/2%
1-2	.070	.045
3-4	.050	.035
5-6	.040	.025
7 or greater	.030	.020

The 1% blocking threshold is for transmission paths carrying traffic direct (without an alternate route) between an end office and a customer's premises. The 1/2% blocking threshold is for transmission paths carrying first routed traffic between an end office and a customer's premises via a Telephone Company access tandem.

ACCESS SERVICE

6. **Switched Access Service** (Cont'd)

6.5 **Rate Categories, Applications, and Regulations** (Cont'd)

6.5.11 **Shared Use Facilities**

When a Switched Access service is provided over the same Special Access High Capacity facility through a common interface, the facility will be ordered, provided, and rated only as Special Access Service as set forth in 7.2.5 following. Shared use of Switched Access facilities (i.e., Special Access Services provided over Switched Access facilities) is not allowed. (T) (T)

(D)
(D)

6.5.12 **CCS7 Access Service**

CCS7 Access Service as described in 6.2.7, connecting a customer's STPs to Telephone Company STPs, requires four STP Port Terminations and four Dedicated Switched Access Facilities. CCS7 Access Service connecting customer Signaling or Service Switching Points to Telephone Company STPs requires two STP Port Terminations and two Dedicated Switched Access facilities.

(A) Dedicated Switched Access

Dedicated Switched Access is composed of two rate elements: Dedicated Switched Access Line (DSAL) and Dedicated Switched Access Transport (DSAT). The DSAL has a nonrecurring charge and monthly recurring charge. The DSAT has only a monthly recurring charge and is charged for on a per airline mile basis.

(B) STP Port Terminations

The STP Port Terminations are charged both a nonrecurring charge and monthly recurring rate.

When a new mated RSTP/STP pair partially or fully replaces an existing mated RSTP/STP pair; Switched Access Ordering charges, DSAL nonrecurring charges, and RSTP/STP Port Termination charges will not apply to service rearrangements to discontinue Dedicated Switched Access connections at the existing pair and reestablish Dedicated Switched Access connections at the new mated RSTP/STP pair.

(C) SS7 Transport

SS7 Transport is provided at a flat rated non-distance sensitive rate as set forth in 6.6.18. The transport rate will apply per segment between each local and/or primary STP location.

ACCESS SERVICE

6. **Switched Access Service** (Cont'd)

6.5 **Rate Categories, Applications, and Regulations** (Cont'd)

6.5.13 **Switched Access Cross Connect**

The Switched Access Cross Connect charge provides the communications path between Telephone Company provided Switched Access Services and a customer's transmission equipment and facilities where the customer is provided EIS as defined in Section 17. The DS0 Cross Connect arrangement may connect directly to a Telephone Company provided Switched Access Voiceband Direct Trunked Transport. The DS1 Cross Connect arrangement may connect directly to Telephone Company provided Switched Access Services at a DS1 interface, to DS1 Direct Trunked Transport, or to a Telephone Company provided DS1 multiplexing arrangement. The DS3 Cross Connect arrangement may connect directly to DS3 Direct Trunked Transport or a Telephone Company provided DS3 to DS1 multiplexing arrangement. When a DS3 Direct Trunked Transport or Cross Connect arrangement is requested for connection to Switched Access Services, a DS3/DS1 multiplexing arrangement is required. The Cross Connect charge applies per DS1 or DS3 connection. Rates for DS1 and DS3 Cross Connect arrangements are listed in 6.6.14.

6.5.14 **Tandem Switch Signaling (TSS)**

TSS will be provided via FGD or BSA-D Switched Access, 500 SAC Access, or 900 SAC Access services with either multifrequency (MF) address signaling or SS7 Out of Band Signaling. TSS is available with originating calling only, terminating calling only, or, where available, two-way calling trunks. TSS two-way calling trunks are only available from end offices where the switch technology is capable of measuring the terminating usage on two-way TSS equipped trunks. Where the end office switch technology is not capable of measuring terminating usage on two-way calling TSS equipped trunks, the customer must order originating calling only and/or terminating calling only trunks for use with TSS.

Switched Access connections to the customer's access tandem location(s) shall be via Direct-Trunked Transport, Entrance Facility, and/or a customer's transmission equipment and facilities using DS1 or DS3 Cross Connect arrangement where the customer is provided Expanded Interconnection Service as described in Section 17. The Switched Access Entrance Facility provides the facility, including interface arrangement, between the point of termination at the customer designated location and the Telephone Company's serving wire center. Direct-Trunked Transport provides the interoffice facilities dedicated to a single customer between the serving wire center and end offices. TSS is not available via a Telephone Company access tandem. The facilities ordered by the customer for connectivity from the customer's access tandem to an IC's CDL is provided via detariffed Special Access facilities. (C)

- For originating usage the owner of the carrier identification code will be billed for all usage.

- For terminating usage all associated Switched Access charges are the responsibility of the TSS customer. At the TSS customer's request, the Telephone Company will bill each of the TSS customer's users directly for their respective usage, if the TSS customer agrees to furnish the Telephone Company, free of charge, the call detail information necessary to bill its users. This call detail information must be provided daily for the previous day's usage in industry standard format (i.e., 1101-20 Expanded Message Record format with end office level detail). The information must be provided by electronic transmission as specified by the Telephone Company.

ACCESS SERVICE

6. **Switched Access Service** (Cont'd)

6.5 **Rate Categories, Applications, and Regulations** (Cont'd)

6.5.14 **Tandem Switch Signaling (TSS)** (Cont'd)

If the TSS customer fails to provide the call detail information or fails to provide the information in the required format within 30 days from the call activity date, then the TSS customer will be billed for that day's usage. Where the total usage measured by the Telephone Company differs from the total amount of usage provided by the TSS customer's call detail information, the Telephone Company will work cooperatively with the customer to resolve the discrepancies.

The TSS customer must retain documentation in support of the billing information for a period of fifteen months after submission of the billing tapes to the Telephone Company. The Telephone Company reserves the right to audit billing tape information upon 30 days' notice to the TSS customer. In the event of a discrepancy, if final agreement cannot be reached, charges will be billed based on the results of the audit.

ACCESS SERVICE

6. **Switched Access Service** (Cont'd)

6.5 **Rate Categories, Applications, and Regulations** (Cont'd)

6.5.15 **Basic Service Elements (BSEs)**

Recurring rates and charges for Basic Service Elements (BSEs) in 6.2.13 are applied on a premium basis as discussed in 6.5.6. The ASR Ordering Charge will not apply when a customer orders BSEs in conjunction with the establishment of a Basic Serving Arrangement (BSA) or the conversion of a feature group to a BSA. The ASR Ordering Charge will apply to changes to or additions of BSEs associated with an established BSA. The application of monthly recurring charges or usage rates to BSEs are as follows. (D)

(A) Alternate Traffic Routing - BSE

Premium nonrecurring charges in 6.6 apply per trunk group equipped. (D)

(B) Automatic Number Identification (ANI) - (BSE)

Rates in 6.6 apply per ANI attempt.

(C) User Transfer - BSE

Monthly recurring charges in 6.6 apply per line arranged.

(D) Hunt Group Arrangement - BSE

Premium monthly recurring charges in 6.6 apply per line equipped. (D)

(E) Queuing - BSE

Premium monthly recurring charges in 6.6 apply per group equipped. (D)

(F) Uniform Call Distribution - BSE

Premium monthly recurring charges in 6.6 apply per line equipped. (D)

(G) Simplified Message Desk Interface (SMDI) - BSE

Premium monthly recurring charges in 6.6 apply per DNAL. (D)

ACCESS SERVICE

6. **Switched Access Service** (Cont'd)

6.5 **Rate Categories, Applications, and Regulations** (Cont'd)

6.5.15 **Basic Service Elements (BSEs)**

(H) Premier Messaging Services Interface (PMSI) aka Inter-Switch Voice Messaging (SVM) - BSE

Monthly recurring charges as shown in 6.6 apply.

(I) Signaling System 7 Message Waiting Indicator (SS7MWI) Signaling Service - BSE

Monthly recurring charges as shown in 6.6 apply.

(J) Caller Identification Parameter (CIP) - BSE

Monthly recurring and non-recurring charges as shown in 6.15 apply.

(K) Remote Call Forwarding - BSE

Premium monthly recurring charges in 6.6 apply per line. (D)

(L) Direct Inward Dialing (DID) - BSE

Monthly recurring charges as shown in 6.6 apply.

(M) Billed Number Screening (BNS) - BSE

Monthly recurring charges in 6.6 apply per line.

(N) Controlink Digital Channel Service (CLDCS) - BSE

Provided on an Individual Case Basis (ICB) with BSA-D.

(O) Answer Supervision - BSE

Monthly recurring charges as shown in 6.6 apply per line.

6.5.16 **Carrier Identification Parameter (CIP)**

The Carrier Identification Parameter (CIP) provides for the transmission of the Carrier Identification Code (CIC) or the access code 101XXXX to the customer with the Initial Address Message (IAM). CIP will be populated by a 4-digit CIC at the rates shown in 6.6.15. The monthly recurring rate is applicable per trunk. The nonrecurring charge is applicable per CIC, per trunk group. The nonrecurring charge has two rate levels. There is a nonrecurring charge applicable to trunk groups direct to the access tandem and a nonrecurring charge applicable to trunk groups direct to an end office.

ACCESS SERVICE

6. Switched Access Services (Cont'd)

6.6 Switched Access Rates and Charges (Cont'd)

6.6.1 Reserved for Future Use (C)
(D)

(D)

ACCESS SERVICE

6. Switched Access Service (Cont'd)

6.6 Switched Access Rates and Charges (Cont'd)

6.6.1 Reserved for Future Use (Cont'd) (C)
(D)

(D)

ACCESS SERVICE

6. Switched Access Service (Cont'd)

6.6 Switched Access Rates and Charges (Cont'd)

6.6.1 Reserved for Future Use (Cont'd) (C)

(D)

(D)

(D)

ACCESS SERVICE

6. Switched Access Service (Cont'd)

6.6 Switched Access Rates and Charges (Cont'd)

6.6.1 Reserved for Future Use (Cont'd) (C)

(D)

(D)

ACCESS SERVICE

6. **Switched Access Service (Cont'd)**

6.6 **Switched Access Rates and Charges (Cont'd)**

6.6.1 **Reserved for Future Use-(Cont'd)** (C)

(D)

(D)

(D)
(D)

ACCESS SERVICE

6. Switched Access Service (Cont'd)

6.6 Switched Access Rates and Charges (Cont'd)

6.6.1 Reserved for Future Use (Cont'd) (C)

(D)

(D)

ACCESS SERVICE

6. Switched Access Service (Cont'd)

6.6 Switched Access Rates and Charges (Cont'd)

6.6.1 Reserved for Future Use (Cont'd) (C)

(D)

(D)

ACCESS SERVICE

6. Switched Access Service (Cont'd)

6.6 Switched Access Rates and Charges (Cont'd)

6.6.1 Reserved for Future Use (Cont'd) (C)

(D)

(D)

ACCESS SERVICE

6. Switched Access Service (Cont'd)

6.6 Switched Access Rates and Charges (Cont'd)

6.6.1 Reserved for Future Use (Cont'd) (C)

(D)

(D)

ACCESS SERVICE

6. **Switched Access Service (Cont'd)**

6.6 **Switched Access Rates and Charges (Cont'd)**

6.6.2 **Reserved for Future Use** (C)

(D)

(D)

ACCESS SERVICE

6. Switched Access Service (Cont'd)

6.6 Switched Access Rates and Charges (Cont'd)

(D)

(D)

ACCESS SERVICE

6. **Switched Access Service** (Cont'd)

6.6 **Switched Access Rates and Charges** (Cont'd)

(D)

(D)

ACCESS SERVICE

6. **Switched Access Service** (Cont'd)

6.6 **Switched Access Rates and Charges** (Cont'd)

(D)

(D)

ACCESS SERVICE

6. **Switched Access Service** (Cont'd)

6.6 **Switched Access Rates and Charges** (Cont'd)

(D)

(D)

ACCESS SERVICE

6. **Switched Access Service** (Cont'd)

6.6 **Switched Access Rates and Charges** (Cont'd)

(D)

(D)

ACCESS SERVICE

6. **Switched Access Service** (Cont'd)

6.6 **Switched Access Rates and Charges** (Cont'd)

(D)

(D)

ACCESS SERVICE

6. **Switched Access Service** (Cont'd)

6.6 **Switched Access Rates and Charges** (Cont'd)

(D)

(D)

ACCESS SERVICE

6. **Switched Access Service** (Cont'd)

6.6 **Switched Access Rates and Charges** (Cont'd)

(D)

(D)

ACCESS SERVICE

6. **Switched Access Service** (Cont'd)

6.6 **Switched Access Rates and Charges** (Cont'd)

(D)

(D)

ACCESS SERVICE

6. **Switched Access Service** (Cont'd)

6.6 **Switched Access Rates and Charges** (Cont'd)

(D)

(D)

ACCESS SERVICE

6. **Switched Access Service** (Cont'd)

6.6 **Switched Access Rates and Charges** (Cont'd)

(D)

(D)

ACCESS SERVICE

6. **Switched Access Service** (Cont'd)

6.6 **Switched Access Rates and Charges** (Cont'd)

(D)

(D)

ACCESS SERVICE

6. **Switched Access Service** (Cont'd)

6.6 **Switched Access Rates and Charges** (Cont'd)

(D)

(D)

ACCESS SERVICE

6. **Switched Access Service** (Cont'd)

6.6 **Switched Access Rates and Charges** (Cont'd)

(D) (D)

(D) (D)

ACCESS SERVICE

6. **Switched Access Service** (Cont'd)

6.6 **Switched Access Rates and Charges** (Cont'd)

(D)

(D)

ACCESS SERVICE

6. **Switched Access Service** (Cont'd)

6.6 **Switched Access Rates and Charges** (Cont'd)

(D)

(D)

ACCESS SERVICE

6. **Switched Access Service** (Cont'd)

6.6 **Switched Access Rates and Charges** (Cont'd)

(D)

(D)

ACCESS SERVICE

6. **Switched Access Service** (Cont'd)

6.6 **Switched Access Rates and Charges** (Cont'd)

6.6.4 **(Reserved for Future Use)** (T)

(D)

(D)

ACCESS SERVICE

6. **Switched Access Service** (Cont'd)

6.6 **Switched Access Rates and Charges** (Cont'd)

6.6.4 **(Reserved for Future Use** (T)

(D)

(D)

ACCESS SERVICE

6. **Switched Access Service** (Cont'd)

6.6 **Switched Access Rates and Charges** (Cont'd)

6.6.4 **(Reserved for Future Use)** (T)

(D)

(D)

ACCESS SERVICE

6. **Switched Access Service** (Cont'd)

6.6 **Switched Access Rates and Charges** (Cont'd)

6.6.4 **(Reserved for Future Use)** (T)

(D)

(D)

ACCESS SERVICE

6. **Switched Access Service** (Cont'd)

6.6 **Switched Access Rates and Charges** (Cont'd)

6.6.4 **(Reserved for Future Use)** (T)

(D)

(D)

ACCESS SERVICE

6. **Switched Access Service** (Cont'd)

6.6 **Switched Access Rates and Charges** (Cont'd)

6.6.4 **(Reserved for Future Use)** (T)

(D)

(D)

ACCESS SERVICE

6. **Switched Access Service** (Cont'd)

6.6 **Switched Access Rates and Charges** (Cont'd)

6.6.4 **(Reserved for Future Use)** (T)

(D)

(D)

ACCESS SERVICE

6. **Switched Access Service** (Cont'd)

6.6 **Switched Access Rates and Charges** (Cont'd)

6.6.4 **(Reserved for Future Use)** (T)

(D)

(D)

ACCESS SERVICE

6. **Switched Access Service** (Cont'd)

6.6 **Switched Access Rates and Charges** (Cont'd)

6.6.5 **(Reserved for Future Use)** (D)

(D)

ACCESS SERVICE

6. **Switched Access Service** (Cont'd)

6.6 **Switched Access Rates and Charges** (Cont'd)

6.6.5 **(Reserved for Future Use)** (D)

(D)

ACCESS SERVICE

6. **Switched Access Service** (Cont'd)

6.6 **Switched Access Rates and Charges** (Cont'd)

6.6.5 **(Reserved for Future Use)** (D)

(D)

ACCESS SERVICE

6. **Switched Access Service** (Cont'd)

6.6 **Switched Access Rates and Charges** (Cont'd)

6.6.5 **(Reserved for Future Use)** (D)

(D)

ACCESS SERVICE

6. **Switched Access Service** (Cont'd)

6.6 **Switched Access Rates and Charges** (Cont'd)

6.6.5 **(Reserved for Future Use)** (D)

(D)

(This page filed under Transmittal No. 251.)

ACCESS SERVICE

6. **Switched Access Service** (Cont'd)

6.6 **Switched Access Rates and Charges** (Cont'd)

6.6.5 **(Reserved for Future Use)** (D)

(D)

ACCESS SERVICE

6. **Switched Access Service** (Cont'd)

6.6 **Switched Access Rates and Charges** (Cont'd)

6.6.5 **(Reserved for Future Use)** (D)

(D)

(This page filed under Transmittal No. 251.)

6. **Switched Access Service** (Cont'd)

6.6 **Switched Access Rates and Charges** (Cont'd)

6.6.5 **(Reserved for Future Use)** (D)

(D)

ACCESS SERVICE

6. **Switched Access Service** (Cont'd)

6.6 **Switched Access Rates and Charges** (Cont'd)

6.6.6 **North Carolina**

(A) Local Switching - Bundled (EOSB)

Premium Rate Toll Free Local Switching-Originating Per Access Minute (EOSB)	Premium Rate Other Than Toll Free Local Switching Originating Per Access Minute (EOSB)	Premium Rate Local Switching-Terminating Per Access Minute (EOSB)	
$.000000	$.0024060	$.0000000	(R)(x)

Local Switching - Unbundled (EOSU) - Circuit Switched Line

Premium Rate Local Switching-Originating Per Access Minute (EOSU)	Premium Rate Local Switching-Terminating Per Access Minute (EOSU)
$.0024060	$.0000000

Local Switching - Unbundled (EOSU) - Circuit Switched Trunk

Premium Rate Toll Free Local Switching-Originating Per Access Minute (EOSU)	Premium Rate Other Than Toll Free Local Switching Originating Per Access Minute (EOSU)	Premium Rate Local Switching-Terminating Per Access Minute (EOSU)	
$.000000	$.0024060	$.0000000	(R)(x)

Local Switching – Composite Terminating End Office Charge

Premium Rate Local Switching-Terminating Per Access Minute
$.000000

(B) Information Surcharge

Premium Rate Information Surcharge Per Access Minute
$.0000000

(C) Entrance Facility - 2-Wire and 4-Wire Voicegrade

Service Installation Charge Per Entrance Facility	Entrance Facility - 2-Wire Voicegrade Monthly Rate	Entrance Facility - 4-Wire Voicegrade Monthly Rate
$200.00	$28.49	$37.30

(x) Issued in compliance with the Order of the Federal Communications Commission in WC Docket No. 18-156, *In the Matter of 8YY Access Charge Reform*, FCC 20-143, released October 9, 2020.

(This page filed under Transmittal No. 1436.)

ACCESS SERVICE

6. **Switched Access Service** (Cont'd)

6.6 **Switched Access Rates and Charges** (Cont'd)

6.6.6 **North Carolina** (Cont'd)

(D) Entrance Facility - DS1

Service Installation Charge Per Entrance Facility	Entrance Facility - DS1 Monthly Rate
$450.00	$268.36

(E) Entrance Facility - DS3

Service Installation Charge Per Entrance Facility	Entrance Facility - DS3 Monthly Rate
$1,000.00	$1,800.00

(F) Direct-Trunked Transport - Voicegrade

Direct-Trunked Transport - Mileage Voicegrade Per Mile, Per Month (1YTXS) (1YLXS)	Direct-Trunked Transport - Fixed Voicegrade Per Facility (TRL) (TRLAX)
$1.05	$12.60

(G) Direct-Trunked Transport - DS1

Direct-Trunked Transport - Mileage DS1 Per Mile, Per Month (1YTXS) (1YLXS)	Direct-Trunked Transport - Fixed DS1 Per Facility (TRL) (TRLAX)
$7.30	$20.90

(H) Direct-Trunked Transport - DS3

Direct-Trunked Transport - Mileage DS3 Per Mile, Per Month (1YTXS) (1YLXS)	Direct-Trunked Transport - Fixed DS3 Per Facility (TRL) (TRLAX)
$50.00	$500.00

ACCESS SERVICE

6. **Switched Access Service** (Cont'd)

6.6 **Switched Access Rates and Charges** (Cont'd)

6.6.6 **North Carolina** (Cont'd)

(I) Dedicated Trunk Port

End Office Dedicated Trunk Port-Voicegrade Monthly Rate, Per Channel * (PT8HX)	End Office Dedicated Trunk Port - DS1 Monthly Rate, Per Channel * (PT8JX)
$11.25	$11.25

Access Tandem Dedicated Trunk Port-Voicegrade Monthly Rate, Per Channel (PT8KX)	Access Tandem Dedicated Trunk Port - DS1 Monthly Rate, Per Channel (PT8LX)
$12.50	$12.50

(J) Shared Trunk Port

Toll Free Shared Trunk Port-Originating Per Access Minute	Other Than Toll Free Shared Trunk-Port Originating Per Access Minute	Shared Trunk Port-Terminating Per Access Minute	
$.000000	$.0016880	$.000000	(R)(x)

(K) Shared Multiplexing

Shared Multiplexing Other Than Toll Free Originating Per Access Minute	To Telephone Company End Office Terminating Per Access Minute	To Third Party Terminating Per Access Minute
$.0000000	$.0000000	$.0000000

(x) Issued in compliance with the Order of the Federal Communications Commission in WC Docket No. 18-156, *In the Matter of 8YY Access Charge Reform, FCC 20-143*, released October 9, 2020.

* Rate will only apply to the portion associated with originating usage.

(This page filed under Transmittal No. 1436.)

ACCESS SERVICE

6. **Switched Access Service** (Cont'd)

6.6 **Switched Access Rates and Charges** (Cont'd)

6.6.6 **North Carolina** (Cont'd)

(L) Tandem-Switched Transport – Facility
- Per Access Minute,
  Per Airline Mile

– Other Than Toll Free Originating	$.000002	(C)(x)
– Terminating to Telephone Company End Offices	$.000000	
– Terminating to Third Party	$.000002	

(M) Tandem-Switched Transport – Termination
- Per Access Minute,
  Per Termination

– Other Than Toll Free Originating	$.000000	(C)(x)
– Terminating to Telephone Company End Offices	$.000000	
– Terminating to Third Party	$.000000	

(N) Tandem Switching Rate
- Per Access Minute

(USOC)

– Toll Free Originating	$.001000	(N)(x)
– Other Than Toll Free Originating	$.001574	(C)(x)
– Terminating to Telephone Company End Offices	$.000000	
– Terminating to Third Party	$.001574	

(x) Issued in compliance with the Order of the Federal Communications Commission in WC Docket No. 18-156, *In the Matter of 8YY Access Charge Reform*, FCC 20-143, released October 9, 2020.

ACCESS SERVICE

6. **Switched Access Service** (Cont'd)

6.6 **Switched Access Rates and Charges** (Cont'd)

6.6.6 **North Carolina** (Cont'd)

(O) Interconnection Rate

Premium Rate

Telephone Company Provided Transport Per Originating Access Minute	Telephone Company Provided Transport Per Terminating Access Minute
$ .0000000	$ .0000000

Premium Rate

Per EIS Originating Access Minute	Per EIS Terminating Access Minute
$ .0000000	$ .0000000

(P) Multiplexing

DS1 to Voice		DS3 to DS1	
Service Installation Charge	Monthly Rate	Service Installation Charge	Monthly Rate
$800.00	$200.00	$450.00	$481.73

(D)
|
|
|
|
|
(D)

ACCESS SERVICE

6. **Switched Access Service** (Cont'd)

6.6 **Switched Access Rates and Charges** (Cont'd)

6.6.6 **North Carolina** (Cont'd)

(Q) Miscellaneous Switched Access Rates and Charges

	Premium	Basic	
Toll Free Data Base Query Service - Per Query	$ 0.0000000	$ 0.000200	(R)(x)

	Per ASR
ASR Ordering Charge USOC: SESSE	$35.17

	Per Call
FGD BSA-D Blocking Charge	$ .01

	1st NXX	Each Add'l NXX
900 NXX Translation Nonrecurring Charge Per ASR/Per End Office USOC: NXSAX	$41.60	$5.39
500 NXX Translation Nonrecurring Charge Per ASR/Per End Office USOC: NW51X NW5AX	$23.00	$12.00

(R) Basic Service Elements (BSEs)

(1) Alternate Traffic Routing - BSE

Premium Nonrecurring Rate Per Trunk Group Equipped (CF3AR)
$74.90

(2) Automatic Number Identification - (ANI) - BSE

Rate Per ANI Attempt
$ .0001600

(x) Issued in compliance with the Order of the Federal Communications Commission in WC Docket No. 18-156, *In the Matter of 8YY Access Charge Reform*, FCC 20-143, released October 9, 2020.

ACCESS SERVICE

6. **Switched Access Service** (Cont'd)

6.6 **Switched Access Rates and Charges** (Cont'd)

6.6.6 **North Carolina** (Cont'd)

(R) Basic Service Elements (BSEs) (Cont'd)

(3) User Transfer - BSE

Monthly Rate Per Line Arranged (EO3)
$1.50

(4) Hunt Group Arrangement - BSE

Premium Monthly Rate Per Line Equipped (CF3HG)	
$29.28	(D)

(5) Queuing – BSE

Premium Monthly Rate Per Group Equipped (CF3QU)	
$15.00	(D)

(6) Uniform Call Distribution - BSE

Premium Monthly Rate Per Line Equipped (CF3UD)	
$5.58	(D)

(7) Simplified Message Desk Interface (SMDI) - BSE

Premium Monthly Rate Per DNAL (SMQPX)	
$242.62	(D)

ACCESS SERVICE

6. **Switched Access Service** (Cont'd)

6.6 **Switched Access Rates and Charges** (Cont'd)

6.6.6 **North Carolina** (Cont'd)

(R) Basic Service Elements (BSEs) (Cont'd)

(8) Premier Messaging Services Interface (PMSI)

Monthly Rate Per Arrangement (CF3MS)
$500.00

(9) Signaling System 7 Message Waiting Indicator (SS7MWI) Signaling Service

Monthly Rate Per Messaging Arrangement (S7M)	
$500.00	(N)

(D)

(D)

ACCESS SERVICE

6. **Switched Access Service** (Cont'd)

6.6 **Switched Access Rates and Charges** (Cont'd)

6.6.6 **North Carolina** (Cont'd)

(R) Basic Service Elements (BSEs) (Cont'd)

(10) Remote Call Forwarding - BSE

Premium Monthly Rate Per Line (FOMPX)	
$15.50	(D)

(D)

(11) Direct Inward Dialing (DID) - BSE

Monthly Rate Per DID Term (NDT)	Monthly Rate Per Block of 20 Numbers (ND4)
$20.39	$3.88

(12) Billed Number Screening (BNS) - BSE

Monthly Rate Per Line (RTVXQ)
$1.00

(13) Answer Supervision - BSE

Monthly Rate Per Line
$10.14

(S) Reserved for Future Use (C)

(D)

(D)
(D)

ACCESS SERVICE

6. **Switched Access Service** (Cont'd)

6.6 **Switched Access Rates and Charges** (Cont'd)

6.6.7 **Pennsylvania**

(A) Local Switching - Bundled (EOSB)

Premium Rate Toll Free Local Switching-Originating Per Access Minute (EOSB)	Premium Rate Other Than Toll Free Local Switching Originating Per Access Minute (EOSB)	Premium Rate Local Switching-Terminating Per Access Minute (EOSB)	
$.000000	$.0024060	$.0000000	(R)(x)

Local Switching - Unbundled (EOSU) - Circuit Switched Line

Premium Rate Local Switching-Originating Per Access Minute (EOSU)	Premium Rate Local Switching-Terminating Per Access Minute (EOSU)
$.0024060	$.0000000

Local Switching - Unbundled (EOSU) - Circuit Switched Trunk

Premium Rate Toll Free Local Switching-Originating Per Access Minute (EOSU)	Premium Rate Other Than Toll Free Local Switching Originating Per Access Minute (EOSU)	Premium Rate Local Switching-Terminating Per Access Minute (EOSU)	
$.000000	$.0024060	$.0000000	(R)(x)

Local Switching – Composite Terminating End Office Charge

Premium Rate Local Switching-Terminating Per Access Minute
$.000000

(B) Information Surcharge

Premium Rate Information Surcharge Per Access Minute
$ .0000000

(C) Entrance Facility - 2-Wire and 4-Wire Voicegrade

Service Installation Charge Per Entrance Facility	Entrance Facility - 2-Wire Voicegrade Monthly Rate	Entrance Facility - 4-Wire Voicegrade Monthly Rate
$200.00	$14.42	$20.95

(x) Issued in compliance with the Order of the Federal Communications Commission in WC Docket No. 18-156, *In the Matter of 8YY Access Charge Reform*, FCC 20-143, released October 9, 2020.

(This page filed under Transmittal No. 1436.)

ACCESS SERVICE

6. **Switched Access Service** (Cont'd)

6.6 **Switched Access Rates and Charges** (Cont'd)

6.6.7 **Pennsylvania** (Cont'd)

(D) Entrance Facility - DS1

Service Installation Charge Per Entrance Facility	Entrance Facility - DS1 Monthly Rate
$450.00	$193.80

(E) Entrance Facility - DS3

Service Installation Charge Per Entrance Facility	Entrance Facility - DS3 Monthly Rate
$1,000.00	$2,937.66

(F) Direct-Trunked Transport – Voicegrade

Direct-Trunked Transport - Mileage Voicegrade Per Mile, Per Month (1YTXS) (1YLXS) (1YTES) (1YTYS) (T)	Direct-Trunked Transport - Fixed Voicegrade Per Facility (TRL) (TRLAX)
$1.08	$3.65

(G) Direct-Trunked Transport - DS1

Direct-Trunked Transport - Mileage DS1 Per Mile, Per Month (1YTXS) (1YLXS) (1YTCS) (1YTYS) (T)	Direct-Trunked Transport - Fixed DS1 Per Facility (TRL) (TRLAX)
$2.50	$5.60

(H) Direct-Trunked Transport - DS3

Direct-Trunked Transport - Mileage DS3 Per Mile, Per Month (1YTXS) (1YLXS) (1YTYS) (T)	Direct-Trunked Transport - Fixed DS3 Per Facility (TRL) (TRLAX)
$123.43	$830.38

ACCESS SERVICE

6. **Switched Access Service** (Cont'd)

6.6 **Switched Access Rates and Charges** (Cont'd)

6.6.7 **Pennsylvania** (Cont'd)

(I) Dedicated Trunk Port

End Office Dedicated Trunk Port-Voicegrade Monthly Rate, Per Channel * (PT8HX)	End Office Dedicated Trunk Port - DS1 Monthly Rate, Per Channel * (PT8JX)
$11.25	$11.25

Access Tandem Dedicated Trunk Port-Voicegrade Monthly Rate (PT8KX)	Access Tandem Dedicated Trunk Port - DS1 Monthly Rate (PT8LX)
$12.50	$12.50

(J) Shared Trunk Port

Shared Trunk Port-Originating Toll Free Per Access Minute	Shared Trunk Port-Originating Other Than Toll Free Per Access Minute	Shared Trunk Port-Terminating Per Access Minute	
$.000000	$.0016880	$.000000	(R)(x)

(K) Shared Multiplexing

Shared Multiplexing Other Than Toll Free Originating Per Access Minute	Shared Multiplexing Terminating To Telephone Company End Offices Per Access Minute	Shared Multiplexing Terminating To Third Party Per Access Minute
$.0000000	$.0000000	$.0000000

(x) Issued in compliance with the Order of the Federal Communications Commission in WC Docket No. 18-156, *In the Matter of 8YY Access Charge Reform*, FCC 20-143, released October 9, 2020.

* Rate will only apply to the portion associated with originating usage.

(This page filed under Transmittal No. 1436.)

ACCESS SERVICE

6. **Switched Access Service** (Cont'd)

6.6 **Switched Access Rates and Charges** (Cont'd)

6.6.7 **Pennsylvania** (Cont'd)

(L) Tandem-Switched Transport – Facility
- Per Access Minute,
  Per Airline Mile

– Other Than Toll Free Originating	$.000002	(C)(x)
– Terminating to Telephone Company End Offices	$.000000	
– Terminating to Third Party	$.000002	

(M) Tandem-Switched Transport – Termination
- Per Access Minute,
  Per Termination

– Other Than Toll Free Originating	$.000000	(C)(x)
– Terminating to Telephone Company End Offices	$.000000	
– Terminating to Third Party	$.000000	

(N) Tandem Switching Rate
- Per Access Minute

(USOC)

– Toll Free Originating	$.001000	(N)(x)
– Other Than Toll Free Originating	$.001574	(C)(x)
– Terminating to Telephone Company End Offices	$.000000	
– Terminating to Third Party	$.001574	

(x) Issued in compliance with the Order of the Federal Communications Commission in WC Docket No. 18-156, *In the Matter of 8YY Access Charge Reform*, FCC 20-143, released October 9, 2020.

(This page filed under Transmittal No. 1420.)

6. **Switched Access Service** (Cont'd)

6.6 **Switched Access Rates and Charges** (Cont'd)

6.6.7 **Pennsylvania** (Cont'd)

(O) Interconnection Rate

Premium Rate

Telephone Company Provided Transport Per Originating Access Minute	Telephone Company Provided Transport Per Terminating Access Minute
$ .0000000	$ .0000000

Premium Rate

Per EIS Originating Access Minute	Per EIS Terminating Access Minute
$ .0000000	$ .0000000

(P) Multiplexing

DS1 to Voice		DS3 to DS1	
Service Installation Charge	Monthly Rate	Service Installation Charge	Monthly Rate
$800.00	$159.15	$450.00	$490.00

(D)
|
|
|
|
|
(D)

ACCESS SERVICE

6. **Switched Access Service** (Cont'd)

6.6 **Switched Access Rates and Charges** (Cont'd)

6.6.7 **Pennsylvania** (Cont'd)

(Q) Miscellaneous Switched Access Rates and Charges

	Premium	Basic	
Toll Free Data Base Query Service - Per Query	$ .0000000	$ .000200	(R)(x)

	Per ASR
ASR Ordering Charge USOC: SESSE	$19.68

	Per Call
FGD and BSA-D Blocking Charge	$ .01

	1st NXX	Each Add'l NXX
900 NXX Translation Nonrecurring Charge Per ASR/Per End Office USOC: NXSAX	$18.44	$2.08
500 NXX Translation Nonrecurring Charge Per ASR/Per End Office USOC:	$20.00 NW51X	$10.00 NW5AX

(R) Basic Service Elements (BSEs)

(1) Alternate Traffic Routing - BSE

Premium Nonrecurring Rate Per Trunk Group Equipped (CF3AR)
$71.14

(2) Automatic Number Identification - (ANI) - BSE

Rate Per ANI Attempt
$0.0001500

(x) Issued in compliance with the Order of the Federal Communications Commission in WC Docket No. 18-156, *In the Matter of 8YY Access Charge Reform*, FCC 20-143, released October 9, 2020.

ACCESS SERVICE

6. **Switched Access Service** (Cont'd)

6.6 **Switched Access Rates and Charges** (Cont'd)

6.6.7 **Pennsylvania** (Cont'd)

(R) Basic Service Elements (BSEs) (Cont'd)

(3) User Transfer - BSE

Monthly Rate Per Line Arranged (EO3)
$1.75

(4) Hunt Group Arrangement - BSE

Premium Monthly Rate Per Line Equipped (CF3HG)	
$3.00	(D)

(5) Queuing - BSE

Premium Monthly Rate Per Group Equipped (CF3QU)	
$15.00	(D)

(6) Uniform Call Distribution - BSE

Premium Monthly Rate Per Line Equipped (CF3UD)	
$5.30	(D)

(7) Simplified Message Desk Interface (SMDI) - BSE

Premium Monthly Rate Per DNAL (SMQPX)	
$230.42	(D)

ACCESS SERVICE

6. **Switched Access Service** (Cont'd)

6.6 **Switched Access Rates and Charges** (Cont'd)

6.6.7 **Pennsylvania** (Cont'd)

(R) Basic Service Elements (BSEs) (Cont'd)

(8) Premier Messaging Services Interface (PMSI)

Monthly Rate Per Arrangement (CF3MS)
$500.00

(9) Signaling System 7 Message Waiting Indicator (SS7MWI) Signaling Service

Monthly Rate Per Messaging Arrangement (S7M)	
$500.00	(N)

(D)

(D)

ACCESS SERVICE

6. **Switched Access Service** (Cont'd)

6.6 **Switched Access Rates and Charges** (Cont'd)

6.6.7 **Pennsylvania** (Cont'd)

(R) Basic Service Elements (BSEs) (Cont'd)

(10) Remote Call Forwarding - BSE

Premium Monthly Rate Per Line (FOMPX)	
$16.00	(D)

(D)

(11) Direct Inward Dialing (DID) - BSE

Monthly Rate Per DID Term (NDT)	Monthly Rate Per Block of 20 Numbers (ND4)
$26.00	$3.05

(12) Billed Number Screening (BNS) - BSE

Monthly Rate Per Line (RTVXQ)
$1.00

(13) Answer Supervision - BSE

Monthly Rate Per Line
$9.70

(S) Reserved for Future Use (C)

(D)
(D)
(D)

ACCESS SERVICE

6. **Switched Access Service** (Cont'd)

6.6 **Switched Access Rates and Charges** (Cont'd)

6.6.8 **(Reserved for Future Use)** (D)

(D)

ACCESS SERVICE

6. **Switched Access Service** (Cont'd)

6.6 **Switched Access Rates and Charges** (Cont'd)

6.6.8 **(Reserved for Future Use)** (D)

(D)

ACCESS SERVICE

6. **Switched Access Service** (Cont'd)

6.6 **Switched Access Rates and Charges** (Cont'd)

6.6.8 **(Reserved for Future Use)** (D)

(D)

ACCESS SERVICE

6. **Switched Access Service** (Cont'd)

6.6 **Switched Access Rates and Charges** (Cont'd)

6.6.8 **(Reserved for Future Use)** (D)

(D)

ACCESS SERVICE

6. **Switched Access Service** (Cont'd)

6.6 **Switched Access Rates and Charges** (Cont'd)

6.6.8

(Reserved for Future Use (D)

(D)

ACCESS SERVICE

6. **Switched Access Service** (Cont'd)

6.6 **Switched Access Rates and Charges** (Cont'd)

6.6.8 **(Reserved for Future Use)** (D)

(D)

ACCESS SERVICE

6. **Switched Access Service** (Cont'd)

6.6 **Switched Access Rates and Charges** (Cont'd)

6.6.8 **(Reserved for Future Use)** (D)

(D)

(This page filed under Transmittal No. 251.)

6. **Switched Access Service** (Cont'd)

6.6 **Switched Access Rates and Charges** (Cont'd)

6.6.8 **(Reserved for Future Use)** (D)

(D)

6. **Switched Access Service** (Cont'd)

6.6 **Switched Access Rates and Charges** (Cont'd)

6.6.9 **Reserved for Future Use** (C)

(D)

(D)

ACCESS SERVICE

6. **Switched Access Service** (Cont'd)

6.6 **Switched Access Rates and Charges** (Cont'd)

6.6.9 **Reserved for Future Use** (Cont'd) (C)

(D)

(D)

ACCESS SERVICE

6. **Switched Access Service** (Cont'd)

6.6 **Switched Access Rates and Charges** (Cont'd)

6.6.9 **Reserved for Future Use** (Cont'd) (C)

(D)

(D)

(D)

ACCESS SERVICE

6. **Switched Access Service** (Cont'd)

6.6 **Switched Access Rates and Charges** (Cont'd)

6.6.9 **Reserved for Future Use** (Cont'd) (C)

(D)

(D)

(This page filed under Transmittal No. 1330.)

ACCESS SERVICE

6. **Switched Access Service** (Cont'd)

6.6 **Switched Access Rates and Charges** (Cont'd)

6.6.9 **Reserved for Future Use** (Cont'd) (C)

(D)

(D)

(D)
(D)

ACCESS SERVICE

6. **Switched Access Service** (Cont'd)

6.6 **Switched Access Rates and Charges** (Cont'd)

6.6.9 **Reserved for Future Use** (Cont'd) (C)

(Q) Miscellaneous Switched Access Rates and Charges (D)

(D)

ACCESS SERVICE

6. **Switched Access Service** (Cont'd)

6.6 **Switched Access Rates and Charges** (Cont'd)

6.6.9 **Reserved for Future Use** (Cont'd) (C)

(D)

(D)

ACCESS SERVICE

6. **Switched Access Service** (Cont'd)

6.6 **Switched Access Rates and Charges** (Cont'd)

6.6.9 **Reserved for Future Use** (Cont'd) (C)

(D)

(D)

ACCESS SERVICE

6. **Switched Access Service** (Cont'd)

6.6 **Switched Access Rates and Charges** (Cont'd)

6.6.9 **Reserved for Future Use** (Cont'd) (C)

(D)

(D)

ACCESS SERVICE

6. **Switched Access Service** (Cont'd)
6.6 **Switched Access Rates and Charges** (Cont'd)

6.6.10 **Virginia**

(A) Local Switching - Bundled (EOSB)

Premium Rate Toll Free Local Switching-Originating Per Access Minute (EOSB)	Premium Rate Other Than Toll Free Local Switching Originating Per Access Minute (EOSB)	Premium Rate Local Switching-Terminating Per Access Minute (EOSB)	
$.000000	$.0024060	$.0000000	(R)(x)

Local Switching - Unbundled (EOSU) - Circuit Switched Line

Premium Rate Local Switching-Originating Per Access Minute (EOSU)	Premium Rate Local Switching-Terminating Per Access Minute (EOSU)
$.0024060	$.0000000

Local Switching - Unbundled (EOSU) - Circuit Switched Trunk

Premium Rate Toll Free Local Switching-Originating Per Access Minute (EOSU)	Premium Rate Other Than Toll Free Local Switching Originating Per Access Minute (EOSU)	Premium Rate Local Switching-Terminating Per Access Minute (EOSU)	
$.000000	$.0024060	$.0000000	(R)(x)

Local Switching – Composite Terminating End Office Charge

Premium Rate Local Switching-Terminating Per Access Minute
$.000000

(B) Information Surcharge

Premium Rate Information Surcharge Per Access Minute
$.0000000

(C) Entrance Facility - 2-Wire and 4-Wire Voicegrade

Service Installation Charge Per Entrance Facility	Entrance Facility - 2-Wire Voicegrade Monthly Rate	Entrance Facility - 4-Wire Voicegrade Monthly Rate
$200.00	$25.58	$38.00

(x) Issued in compliance with the Order of the Federal Communications Commission in WC Docket No. 18-156, *In the Matter of 8YY Access Charge Reform*, FCC 20-143, released October 9, 2020.
(This page filed under Transmittal No. 1436.)

ACCESS SERVICE

6. **Switched Access Service** (Cont'd)

6.6 **Switched Access Rates and Charges** (Cont'd)

6.6.10 **Virginia** (Cont'd)

(D) Entrance Facility - DS1

Service Installation Charge Per Entrance Facility	Entrance Facility - DS1 Monthly Rate
$450.00	$275.41

(E) Entrance Facility - DS3

Service Installation Charge Per Entrance Facility	Entrance Facility - DS3 Monthly Rate
$1,000.00	$1,286.43

(F) Direct-Trunked Transport – Voicegrade

Direct-Trunked Transport - Mileage Voicegrade Per Mile, Per Month (1YTXS) (1YLXS) (1YTYS) (1YTES) (T)	Direct-Trunked Transport - Fixed Voicegrade Per Facility (TRL) (TRLAX)
$2.10	$9.61

(G) Direct-Trunked Transport - DS1

Direct-Trunked Transport - Mileage DS1 Per Mile, Per Month (1YTXS) (1YLXS) (1YTYS) (1YTCS) (T)	Direct-Trunked Transport - Fixed DS1 Per Facility (TRL) (TRLAX)
$4.98	$13.26

(H) Direct-Trunked Transport - DS3

Direct-Trunked Transport - Mileage DS3 Per Mile, Per Month (1YTXS) (1YLXS) (1YTYS)	Direct-Trunked Transport - Fixed DS3 Per Facility (TRL) (TRLAX)
$50.00	$500.00

ACCESS SERVICE

6. **Switched Access Service** (Cont'd)

6.6 **Switched Access Rates and Charges** (Cont'd)

6.6.10 **Virginia** (Cont'd)

(I) Dedicated Trunk Port

End Office Dedicated Trunk Port- Voicegrade Monthly Rate, Per Channel * (PT8HX)	End Office Dedicated Trunk Port - DS1 Monthly Rate, Per Channel * (PT8JX)
$11.25	$11.25

Access Tandem Dedicated Trunk Port- Voicegrade Monthly Rate, Per Channel (PT8KX)	Access Tandem Dedicated Trunk Port - DS1 Monthly Rate, Per Channel (PT8LX)
$12.50	$12.50

(J) Shared Trunk Port

Shared Trunk Port-Originating Per Access Minute Toll Free	Shared Trunk Port-Originating Per Access Minute Other Than Toll Free	Shared Trunk Port-Terminating Per Access Minute	
$.000000	$.0016880	$.000000	(R)(x)

(K) Shared Multiplexing

Shared Multiplexing Per Access Minute Originating Other Than Toll Free	Shared Multiplexing Per Access Minute Terminating To Telephone Company End Offices	Shared Multiplexing Per Access Minute Terminating To Third Party
$.0000000	$.0000000	$.0000000

(x) Issued in compliance with the Order of the Federal Communications Commission in WC Docket No. 18-156, *In the Matter of 8YY Access Charge Reform*, FCC 20-143, released October 9, 2020.

* Rate will only apply to the portion associated with originating usage.

(This page filed under Transmittal No. 1436.)

ACCESS SERVICE

6. **Switched Access Service** (Cont'd)

6.6 **Switched Access Rates and Charges** (Cont'd)

6.6.10 **Virginia** (Cont'd)

(L) Tandem-Switched Transport – Facility
- Per Access Minute,
  Per Airline Mile

– Other Than Toll Free Originating	$.000002	(C)(x)
– Terminating to Telephone Company End Offices	$.000000	
– Terminating to Third Party	$.000002	

(M) Tandem-Switched Transport – Termination
- Per Access Minute,
  Per Termination

– Other Than Toll Free Originating	$.000000	(C)(x)
– Terminating to Telephone Company End Offices	$.000000	
– Terminating to Third Party	$.000000	

(N) Tandem Switching Rate
- Per Access Minute

(USOC)

– Toll Free Originating	$.001000	(N)(x)
– Other Than Toll Free Originating	$.001574	(C)(x)
– Terminating to Telephone Company End Offices	$.000000	
– Terminating to Third Party	$.001574	

(x) Issued in compliance with the Order of the Federal Communications Commission in WC Docket No. 18-156, *In the Matter of 8YY Access Charge Reform*, FCC 20-143, released October 9, 2020.

(This page filed under Transmittal No. 1420.)

ACCESS SERVICE

6. **Switched Access Service** (Cont'd)

6.6 **Switched Access Rates and Charges** (Cont'd)

6.6.10 **Virginia** (Cont'd)

(O) Interconnection Rate

Premium Rate

Telephone Company Provided Transport Per Originating Access Minute	Telephone Company Provided Transport Per Terminating Access Minute
$.0000000	$.0000000

Premium Rate

Per EIS Originating Access Minute	Per EIS Terminating Access Minute
$.0000000	$.0000000

(P) Multiplexing

DS1 to Voice		DS3 to DS1	
Service Installation Charge	Monthly Rate	Service Installation Charge	Monthly Rate
$800.00	$200.44	$450.00	$430.00

(D)
|
|
|
|
|
(D)

ACCESS SERVICE

6. **Switched Access Service** (Cont'd)

6.6 **Switched Access Rates and Charges** (Cont'd)

6.6.10 **Virginia** (Cont'd)

(Q) Miscellaneous Switched Access Rates and Charges

	Premium	Basic	
Toll Free Data Base Query Service - Per Query	$.000000	$.000200	(R)(x)

	Per ASR
ASR Ordering Charge USOC: SESSE	$35.17

	Per Call
FGD and BSA-D Blocking Charge	$ .01

	1st NXX	Each Add'l NXX
900 NXX Translation Nonrecurring Charge Per ASR/Per End Office USOC: NXSAX	$41.60	$5.39
500 NXX Translation Nonrecurring Charge Per ASR/Per End Office USOC:	$23.00 NW51X	$12.00 NW5AX

(R) Basic Service Elements (BSEs)

(1) Alternate Traffic Routing - BSE

Premium Nonrecurring Rate Per Trunk Group Equipped (CF3AR)
$76.74

(2) Automatic Number Identification - (ANI) - BSE

Rate Per ANI Attempt
$.0001600

(x) Issued in compliance with the Order of the Federal Communications Commission in WC Docket No. 18-156, *In the Matter of 8YY Access Charge Reform*, FCC 20-143, released October 9, 2020.

ACCESS SERVICE

6. **Switched Access Service** (Cont'd)

6.6 **Switched Access Rates and Charges** (Cont'd)

6.6.10 **Virginia** (Cont'd)

(R) Basic Service Elements (BSEs) (Cont'd)

(3) User Transfer - BSE

Monthly Rate Per Line Arranged (EO3)
$1.50

(4) Hunt Group Arrangement - BSE

Premium Monthly Rate Per Line Equipped (CF3HG)	
$3.00	(D)

(5) Queuing - BSE

Premium Monthly Rate Per Group Equipped (CF3QU)	
$15.00	(D)

(6) Uniform Call Distribution - BSE

Premium Monthly Rate Per Line Equipped (CF3UD)	
$5.71	(D)

(7) Simplified Message Desk Interface (SMDI) - BSE

Premium Monthly Rate Per DNAL (SMQPX)	
$221.43	(D)

ACCESS SERVICE

6. **Switched Access Service** (Cont'd)

6.6 **Switched Access Rates and Charges** (Cont'd)

6.6.10 **Virginia** (Cont'd)

(R) Basic Service Elements (BSEs) (Cont'd)

(8) Premier Messaging Services Interface (PMSI)

Monthly Rate Per Arrangement (CF3MS)
$500.00

(9) Signaling System 7 Message Waiting Indicator (SS7MWI) Signaling Service

Monthly Rate Per Messaging Arrangement (S7M)	(N)
$500.00	

(D)

(D)

ACCESS SERVICE

6. **Switched Access Service** (Cont'd)

6.6 **Switched Access Rates and Charges** (Cont'd)

6.6.10 **Virginia** (Cont'd)

(R) Basic Service Elements (BSEs) (Cont'd)

(10) Remote Call Forwarding - BSE

Premium Monthly Rate Per Line (FOMPX)	
$17.50	(D)

(D)

(11) Direct Inward Dialing (DID) - BSE

Monthly Rate Per DID Term (NDT)	Monthly Rate Per Block of 20 Numbers (ND4)
$13.66	$20.25

(12) Billed Number Screening (BNS) - BSE

Monthly Rate Per Line (RTVXQ)
$1.00

(13) Answer Supervision - BSE

Monthly Rate Per Line
$3.61

(S) Reserved for Future Use (C)

(D)

(D)
(D)

ACCESS SERVICE

6. **Switched Access Services** (Cont'd)

6.6 **Switched Access Rates and Charges** (Cont'd)

6.6.3 **Reserved for Future Use** (C)

(D)

(D)

ACCESS SERVICE

6. **Switched Access Service** (Cont'd)

6.6 **Switched Access Rates and Charges** (Cont'd)

(D)

(D)

ACCESS SERVICE

6. **Switched Access Service** (Cont'd)

6.6 **Switched Access Rates and Charges** (Cont'd)

(D)

(D)

ACCESS SERVICE

6. **Switched Access Service** (Cont'd)

6.6 **Switched Access Rates and Charges** (Cont'd)

(D)

(D)

ACCESS SERVICE

6. **Switched Access Service** (Cont'd)

6.6 **Switched Access Rates and Charges** (Cont'd)

(D)

(D)

ACCESS SERVICE

6. **Switched Access Service** (Cont'd)

6.6 **Switched Access Rates and Charges** (Cont'd)

(D)

(D)

ACCESS SERVICE

6. **Switched Access Service** (Cont'd)

6.6 **Switched Access Rates and Charges** (Cont'd)

(D)

(D)

ACCESS SERVICE

6. **Switched Access Service** (Cont'd)

6.6 **Switched Access Rates and Charges** (Cont'd)

(D)

(D)

ACCESS SERVICE

6. **Switched Access Service** (Cont'd)

6.6 **Switched Access Rates and Charges** (Cont'd)

(D)

(D)

ACCESS SERVICE

6. **Switched Access Services** (Cont'd)

6.6 **Switched Access Rates and Charges** (Cont'd)

6.6.12 **Reserved for Future Use** (C)

(D)

(D)

ACCESS SERVICE

6. **Switched Access Service** (Cont'd)

6.6 **Switched Access Rates and Charges** (Cont'd)

(D)

(D)

6. **Switched Access Service** (Cont'd)

6.6 **Switched Access Rates and Charges** (Cont'd)

(D)

(D)

ACCESS SERVICE

6. **Switched Access Service** (Cont'd)

6.6 **Switched Access Rates and Charges** (Cont'd)

(D)

(D)

ACCESS SERVICE

6. **Switched Access Service** (Cont'd)

6.6 **Switched Access Rates and Charges** (Cont'd)

(D)

(D)

ACCESS SERVICE

6. **Switched Access Service** (Cont'd)

6.6 **Switched Access Rates and Charges** (Cont'd)

(D)

(D)

6. **Switched Access Service** (Cont'd)

6.6 **Switched Access Rates and Charges** (Cont'd)

(D)

(D)

ACCESS SERVICE

6. **Switched Access Service** (Cont'd)

6.6 **Switched Access Rates and Charges** (Cont'd)

(D)

(D)

ACCESS SERVICE

6. **Switched Access Service** (Cont'd)

6.6 **Switched Access Rates and Charges** (Cont'd)

6.6.13 **Reserved for Future Use** (C)

(D)

(D)

ACCESS SERVICE

6. **Switched Access Service** (Cont'd)

6.6 **Switched Access Rates and Charges** (Cont'd)

(D)

(D)

ACCESS SERVICE

6. **Switched Access Service** (Cont'd)

6.6 **Switched Access Rates and Charges** (Cont'd)

(D)

(D)

ACCESS SERVICE

6. **Switched Access Service** (Cont'd)

6.6 **Switched Access Rates and Charges** (Cont'd)

(D)

(D)

6. **Switched Access Service** (Cont'd)

6.6 **Switched Access Rates and Charges** (Cont'd)

(D)

(D)

ACCESS SERVICE

6. **Switched Access Service** (Cont'd)

6.6 **Switched Access Rates and Charges** (Cont'd)

(D)

(D)

ACCESS SERVICE

6. **Switched Access Service** (Cont'd)

6.6 **Switched Access Rates and Charges** (Cont'd)

(D)

(D)

ACCESS SERVICE

6. **Switched Access Service** (Cont'd)

6.6 **Switched Access Rates and Charges** (Cont'd)

(D)

(D)

ACCESS SERVICE

6. **Switched Access Service** (Cont'd)

6.6 **Switched Access Rates and Charges** (Cont'd)

(D)

(D)

ACCESS SERVICE

6. **Switched Access Service** (Cont'd)

6.6 **Switched Access Rates and Charges** (Cont'd)

6.6.14 **Switched Access Cross Connect**

State	DS0 Monthly Rate	DS1 Monthly Rate	DS3 Monthly Rate	
				(D)
				(D)
Virginia	3.35	4.75	30.23	

ACCESS SERVICE

6 **Switched Access Service** (Cont'd)

6.6 **Switched Access Rates and Charges** (Cont'd)

6.6.15 **Carrier Identification Parameter (CIP)**

	Non-Recurring Charge-Per CIC, Per End Office Direct Trunk Group	Non-Recurring Charge-Per CIC, Per Access Tandem Direct Trunk Group	Monthly Recurring Charge Per Trunk	
(USOC)	(U7CEG)	(U7C)	(U7CPT)	
Jurisdiction				
				(D)
North Carolina	80.00	1,120.00	.46	
Pennsylvania	80.00	1,120.00	.46	
				(D)
Virginia	80.00	1,120.00	.46	

ACCESS SERVICE

6. **Switched Access Service** (Cont'd)

6.6 **Switched Access Rates and Charges** (Cont'd)

6.6.16 **CCS7 Access Service - Dedicated Switched Access**

(A) 56 Kbps Digital Facilities

	Dedicated Switched Access Transport (Per Airline Mile) Monthly Rate	Dedicated Switched Access Line Nonrecurring Charge	Dedicated Switched Access Line Monthly Rate	
(USOC)	1J5FX	XSF5X	XSF5X	(T)
Jurisdiction				
N Carolina	2.20	100.00	71.51	(D)
Virginia	2.41	100.00	68.06	

(This page filed under Transmittal No. 1368.)

ACCESS SERVICE

6. **Switched Access Service** (Cont'd)

6.6 **Switched Access Rates and Charges** (Cont'd)

6.6.16 **CCS7 Access Service - Dedicated Switched Access** (Cont'd)

(B) High Capacity Digital DS1 (1.544 Mbps) Facilities

	Dedicated Switched Access Transport (Per Airline Mile)	Dedicated Switched Access Line		
	Monthly Rate	Nonrecurring Charge	Monthly Rate	
(USOC)	1J5WS	XSF1X	XSF1X	
Jurisdiction				
N Carolina	13.01	1,500.00	331.97	(D)
Virginia	20.31	1,500.00	334.77	

ACCESS SERVICE

6. **Switched Access Service** (Cont'd)

6.6 **Switched Access Rates and Charges** (Cont'd)

6.6.17 **CCS7 Access Service - RSTP or STP Port Termination**

(USOC)	Nonrecurring Charge PT8SX	Monthly Rate PT8SX	
Jurisdiction			
N Carolina	53.00	559.00	(D)
Virginia	52.00	499.28	

ACCESS SERVICE

6. **Switched Access Service** (Cont'd)

6.6 **Switched Access Rates and Charges** (Cont'd)

6.6.18 **CCS7 Access Service - SS7 Transport**

	Primary STP to Primary STP	Primary STP to Any Local STP	
	Monthly Rate	Monthly Rate	
USOC	S7TPP	S7TPL	
Jurisdiction			
			(D)
			(D)
Virginia	900.00	600.00	